# 8. Level 3 Repair

## 8-1.Block Diagram

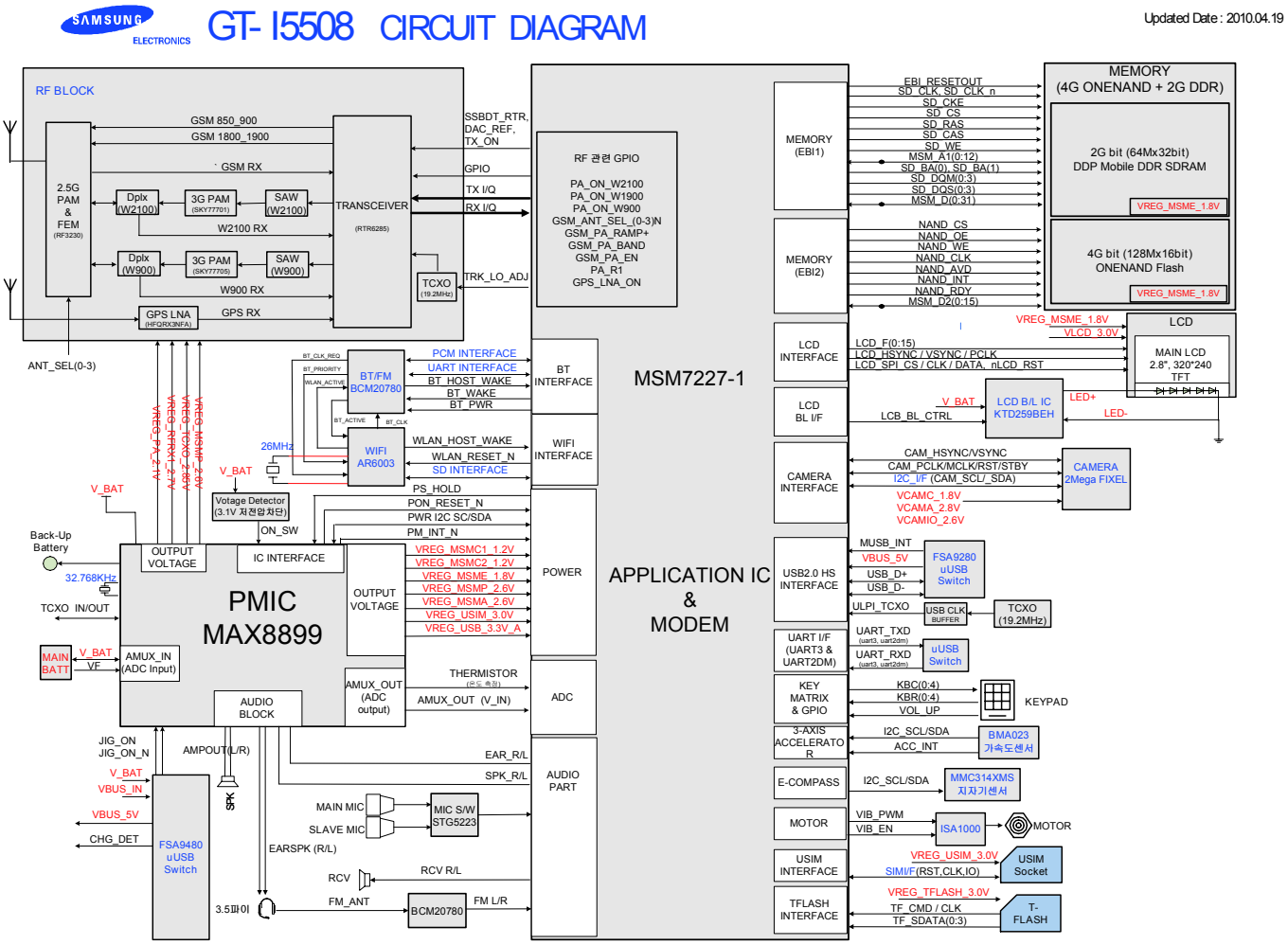




SAMSUNG Proprietary-Contents may change without notice
This Document can not be used without Samsung's authorization

## 8-2. PCB Diagrams

### 8-2-1. Top

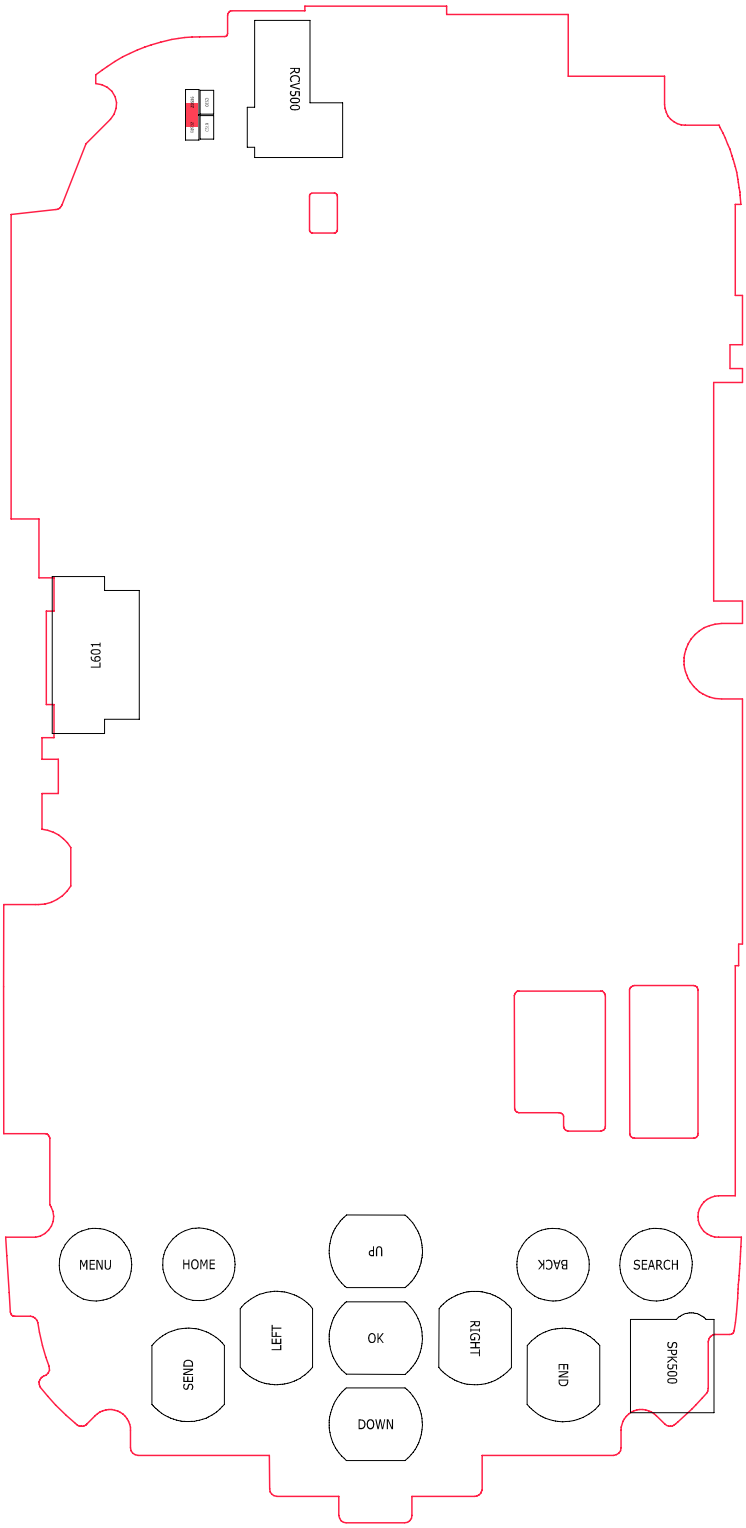




SAMSUNG Proprietary-Contents may change without notice
This Document can not be used without Samsung's authorization

## 8-2-1. Bottom

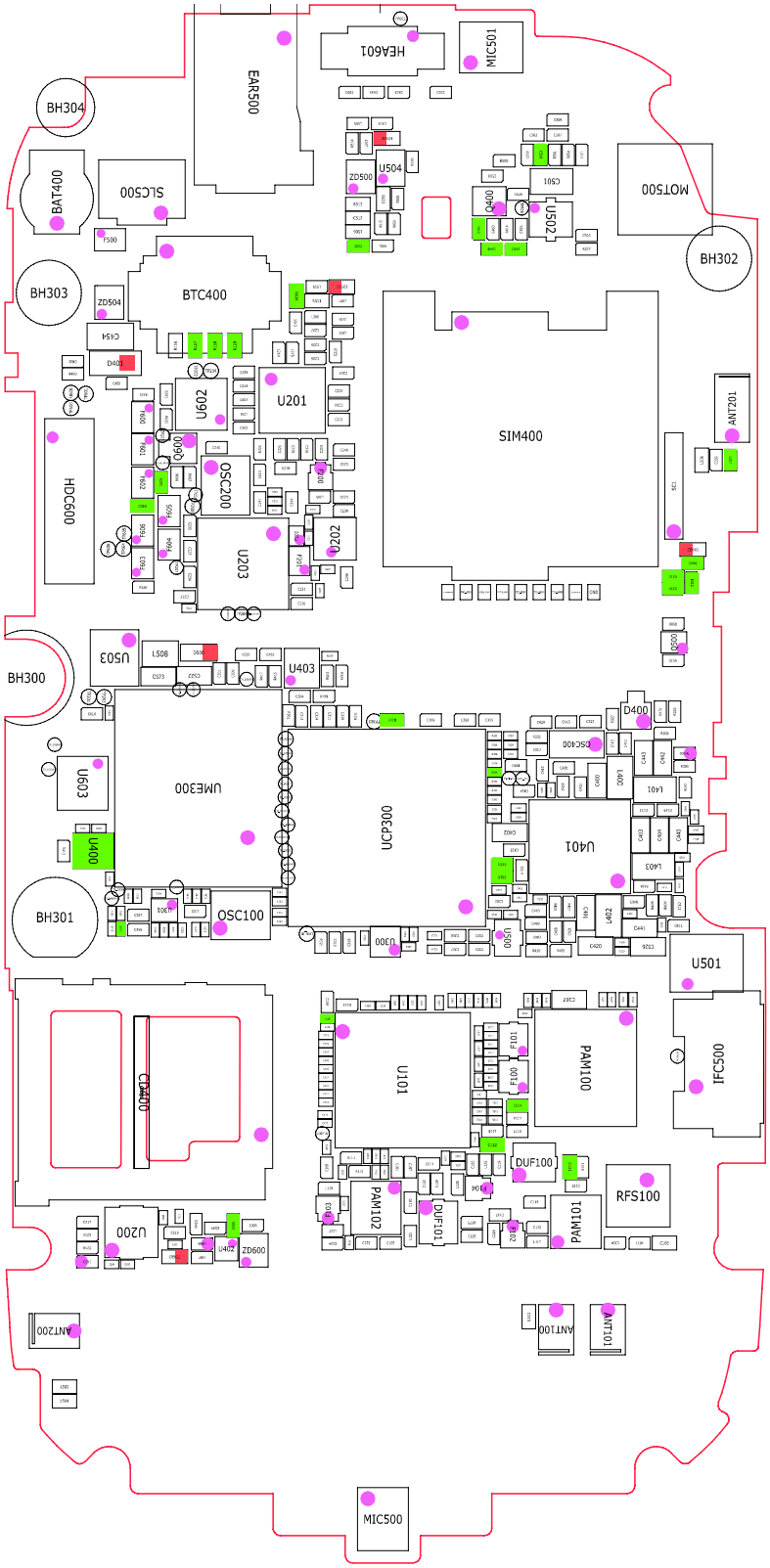




SAMSUNG Proprietary-Contents may change without notice
This Document can not be used without Samsung's authorization

## 8-3. LOGIC

### 8-3-1. Power On

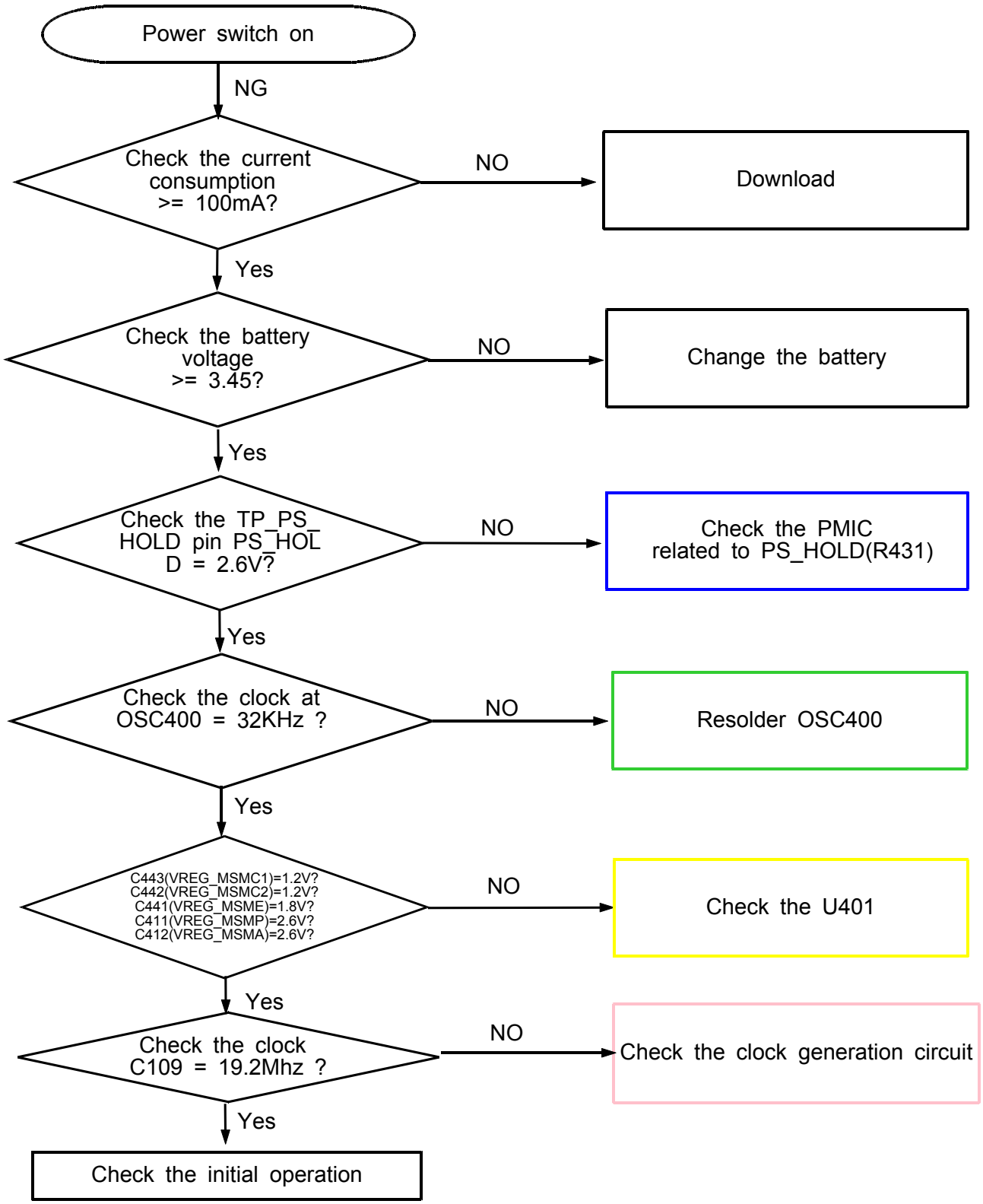




SAMSUNG Proprietary-Contents may change without notice
This Document can not be used without Samsung's authorization

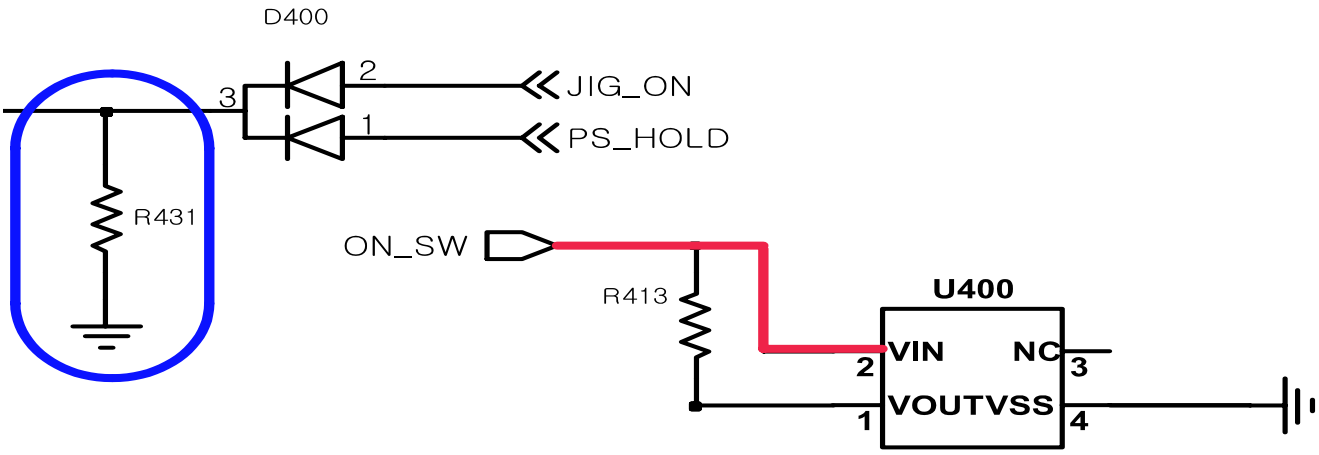


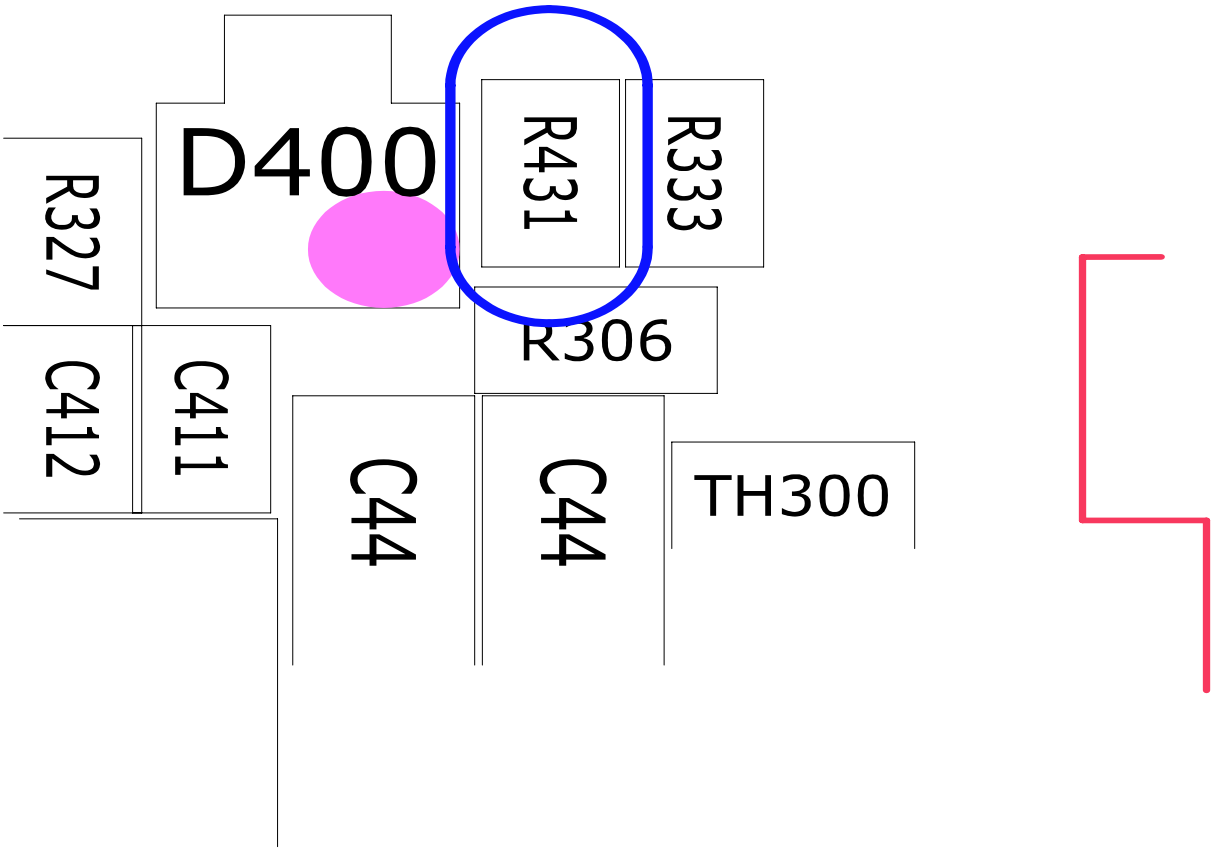




SAMSUNG Proprietary-Contents may change without notice
This Document can not be used without Samsung's authorization

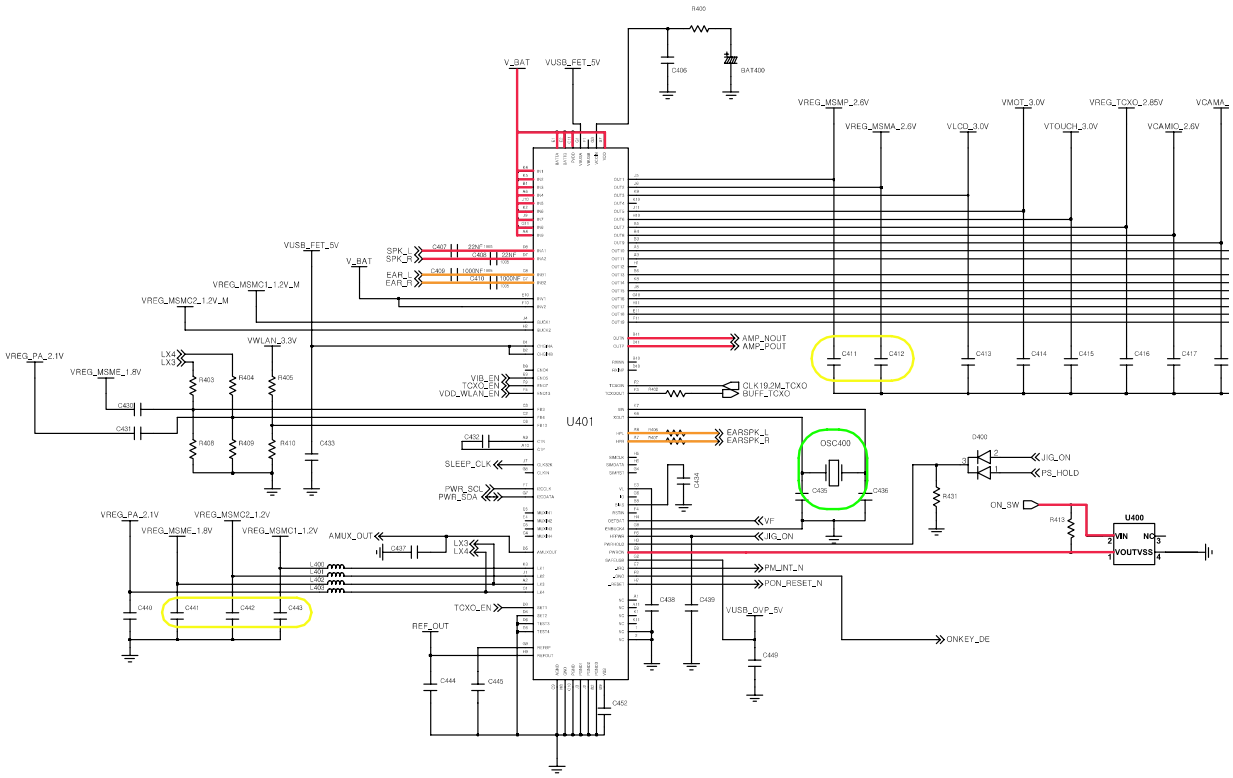


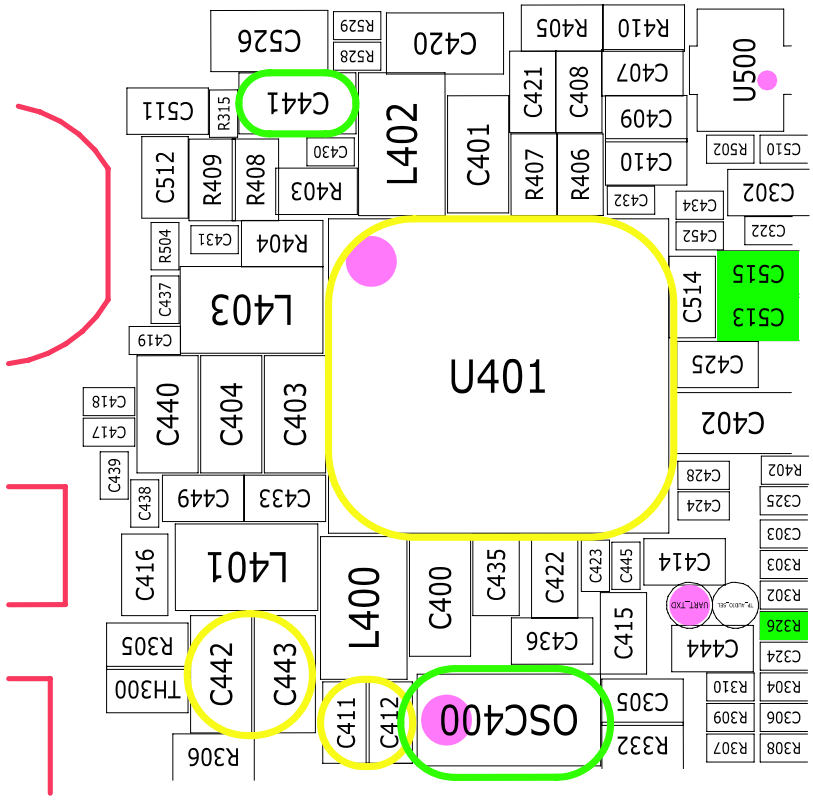




SAMSUNG Proprietary-Contents may change without notice
This Document can not be used without Samsung's authorization

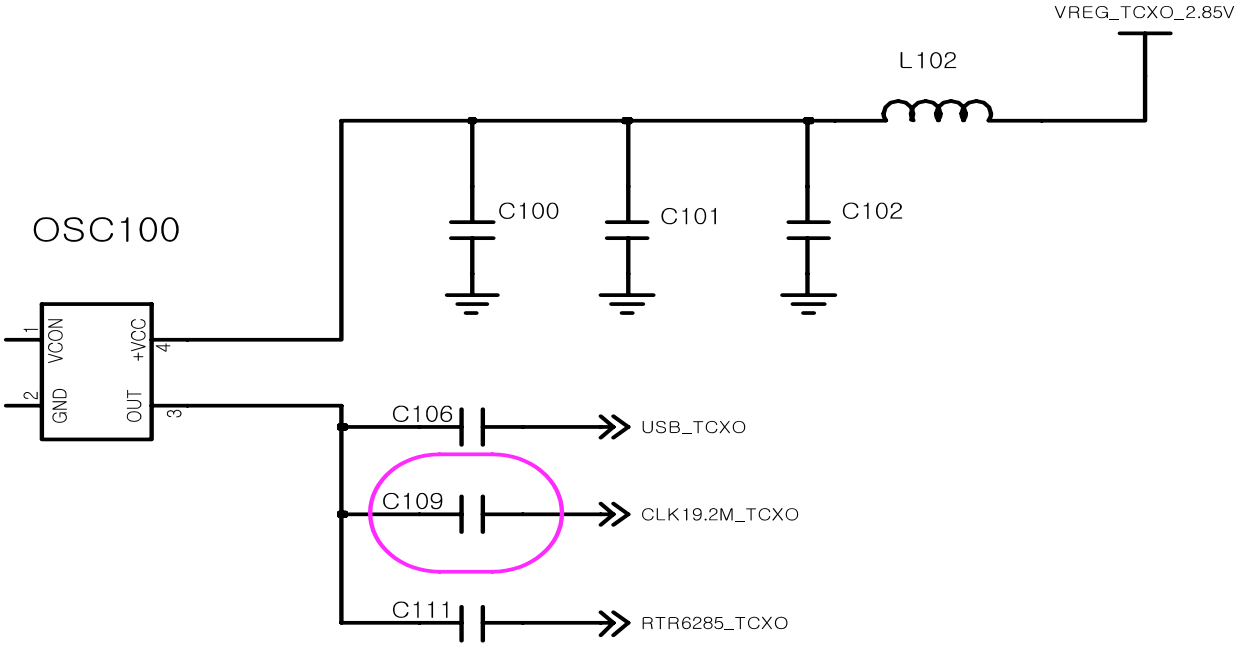


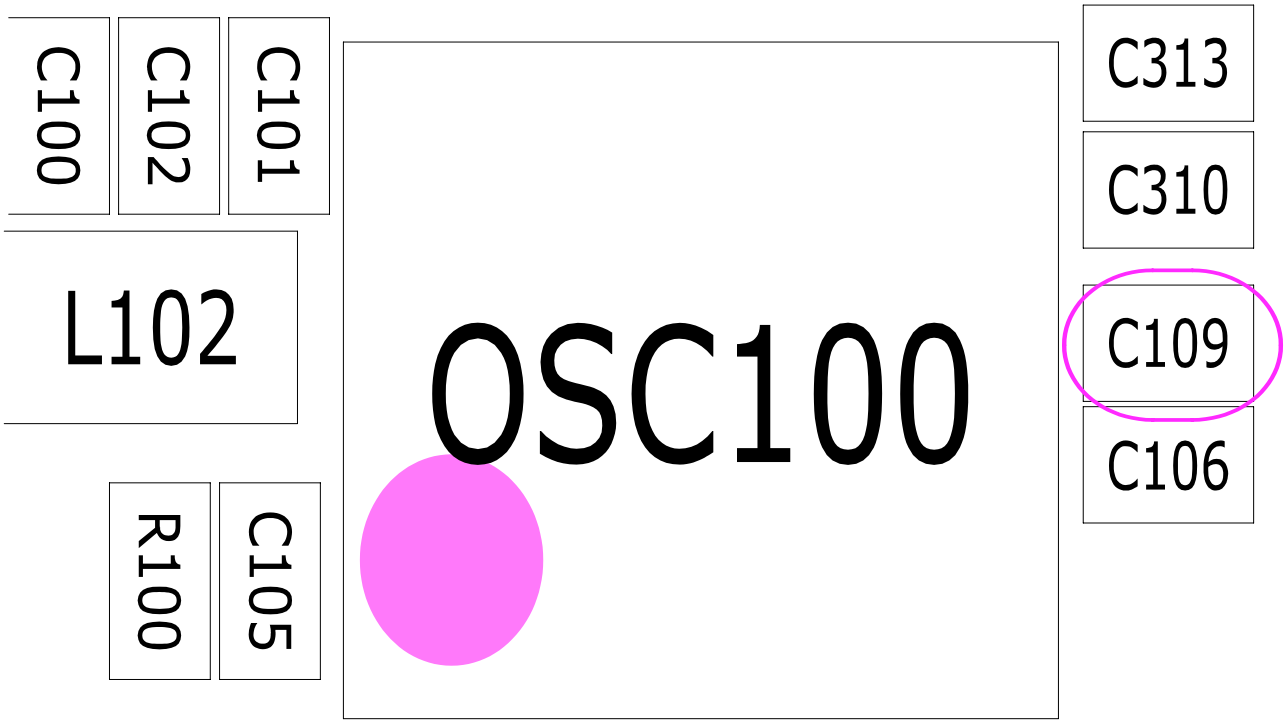




SAMSUNG Proprietary-Contents may change without notice
This Document can not be used without Samsung's authorization

## 8-3-2. LCD Working

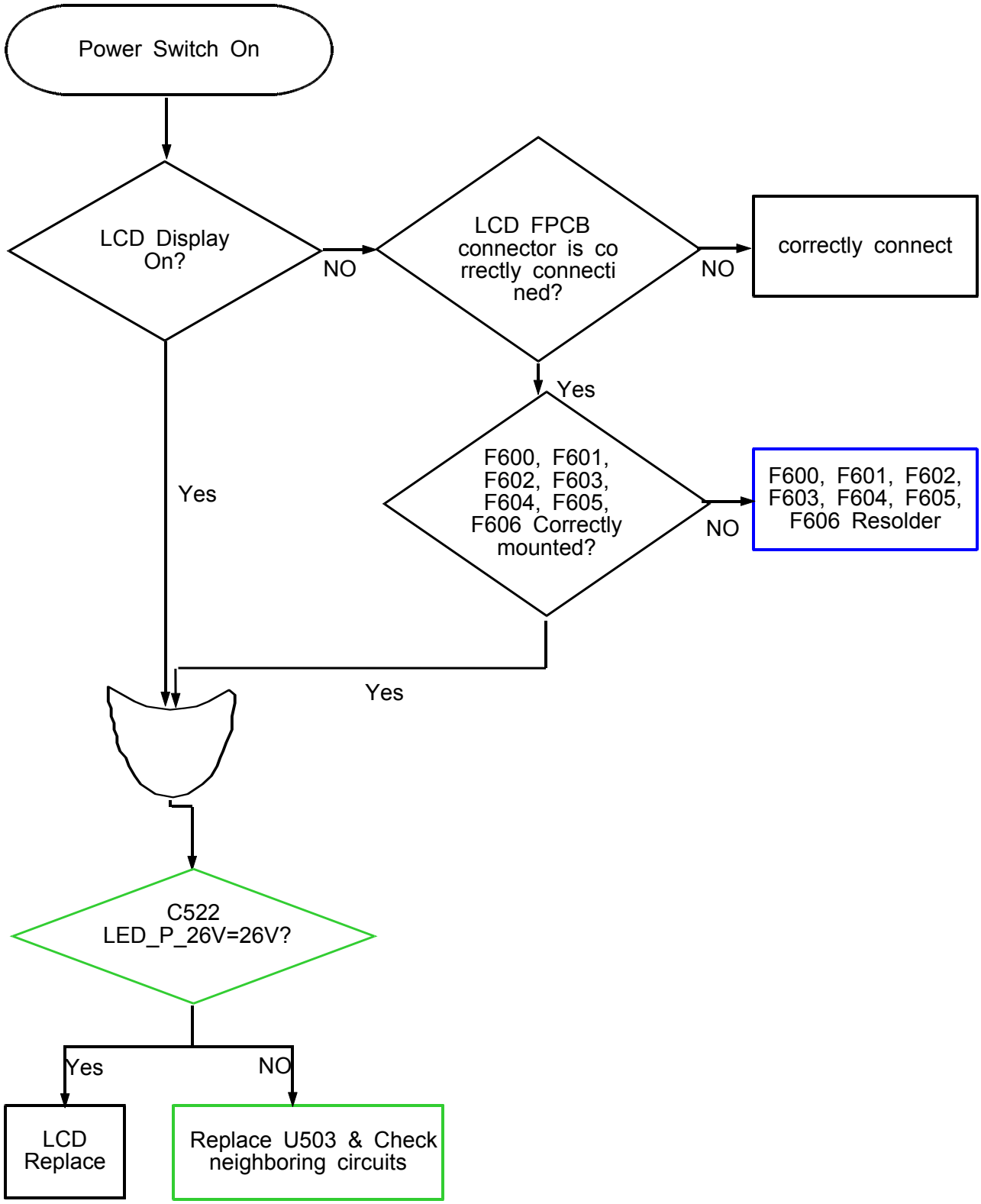




SAMSUNG Proprietary-Contents may change without notice
This Document can not be used without Samsung's authorization

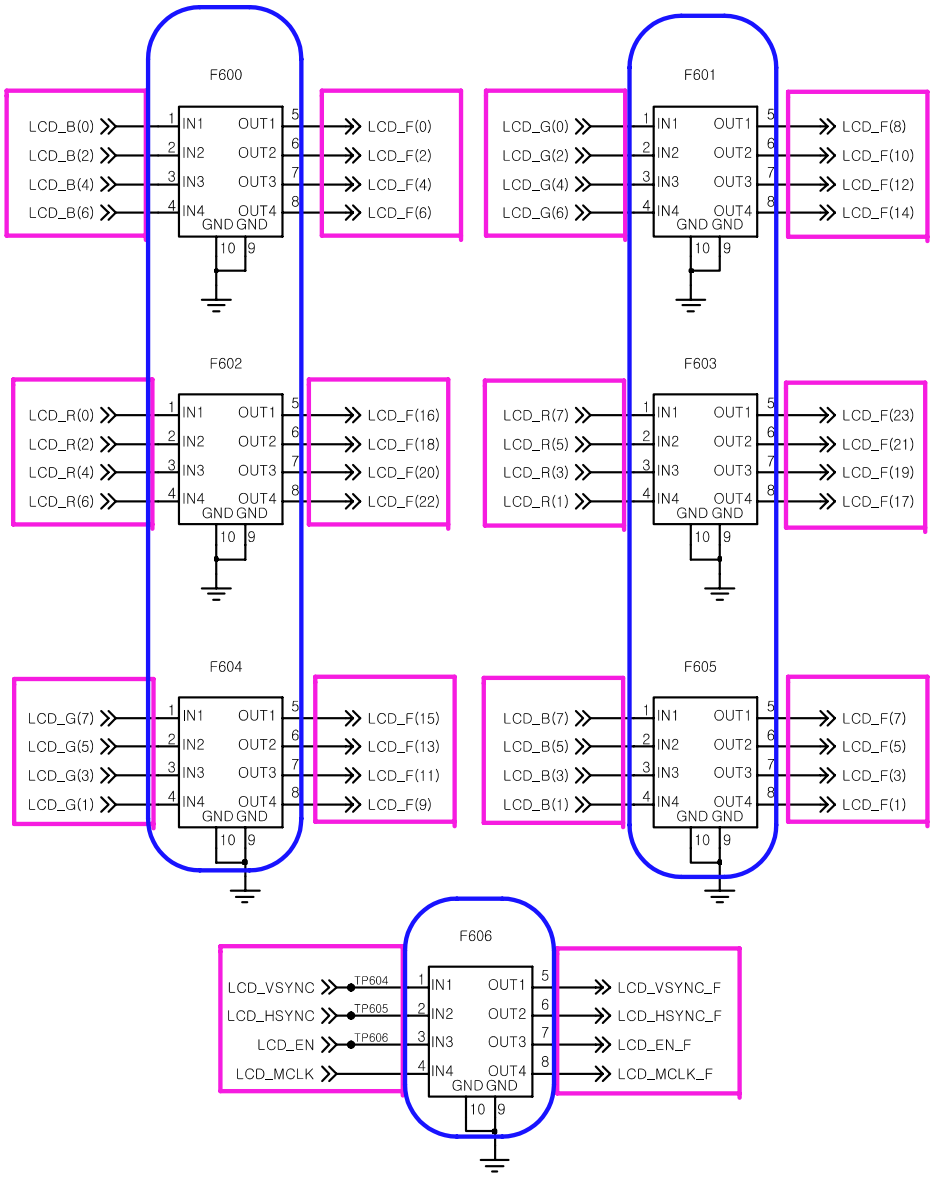


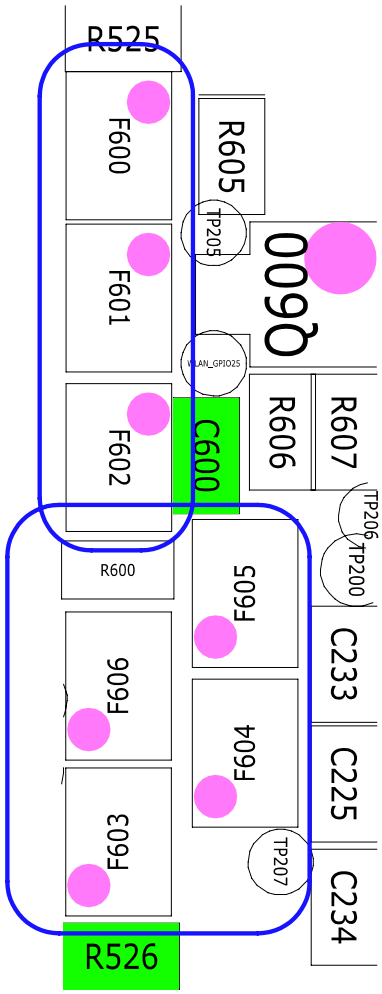




SAMSUNG Proprietary-Contents may change without notice
This Document can not be used without Samsung's authorization

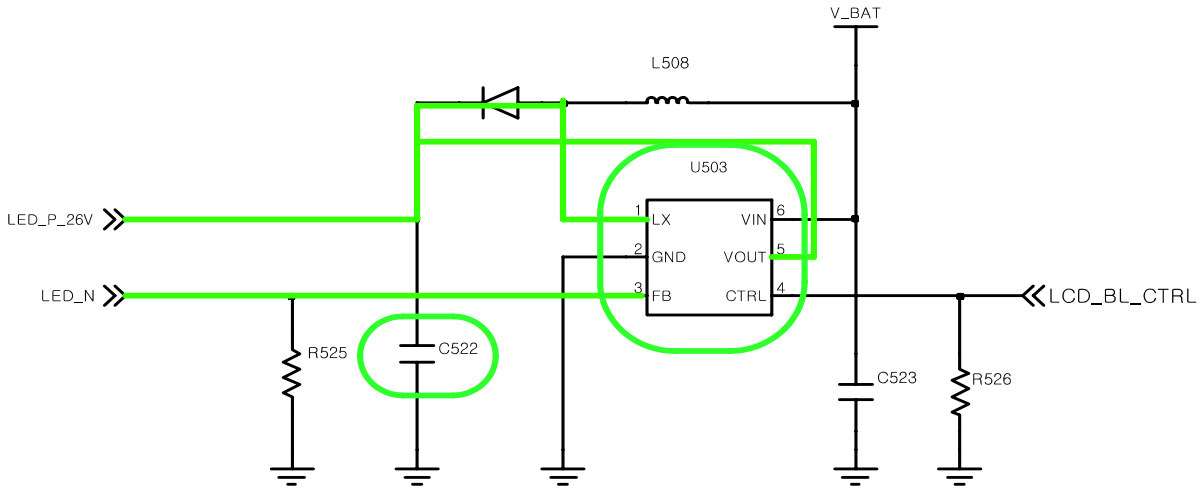


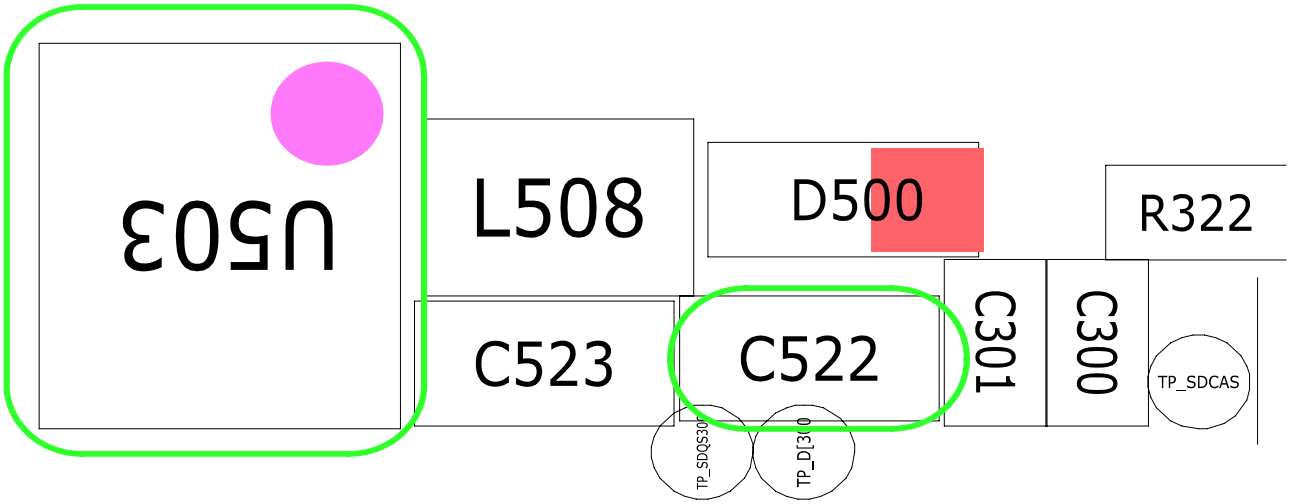




SAMSUNG Proprietary-Contents may change without notice
This Document can not be used without Samsung's authorization

8-3-3. TSP

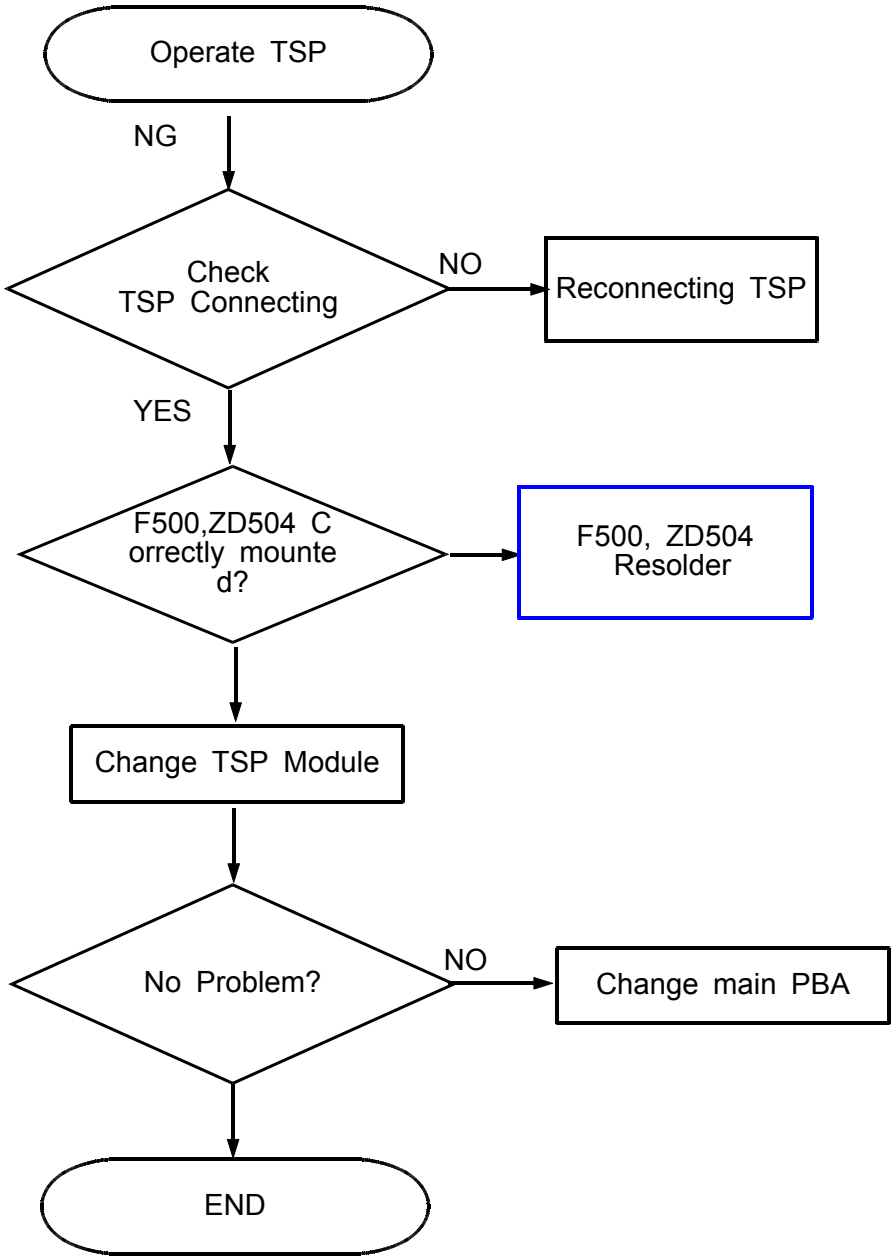




SAMSUNG Proprietary-Contents may change without notice
This Document can not be used without Samsung's authorization

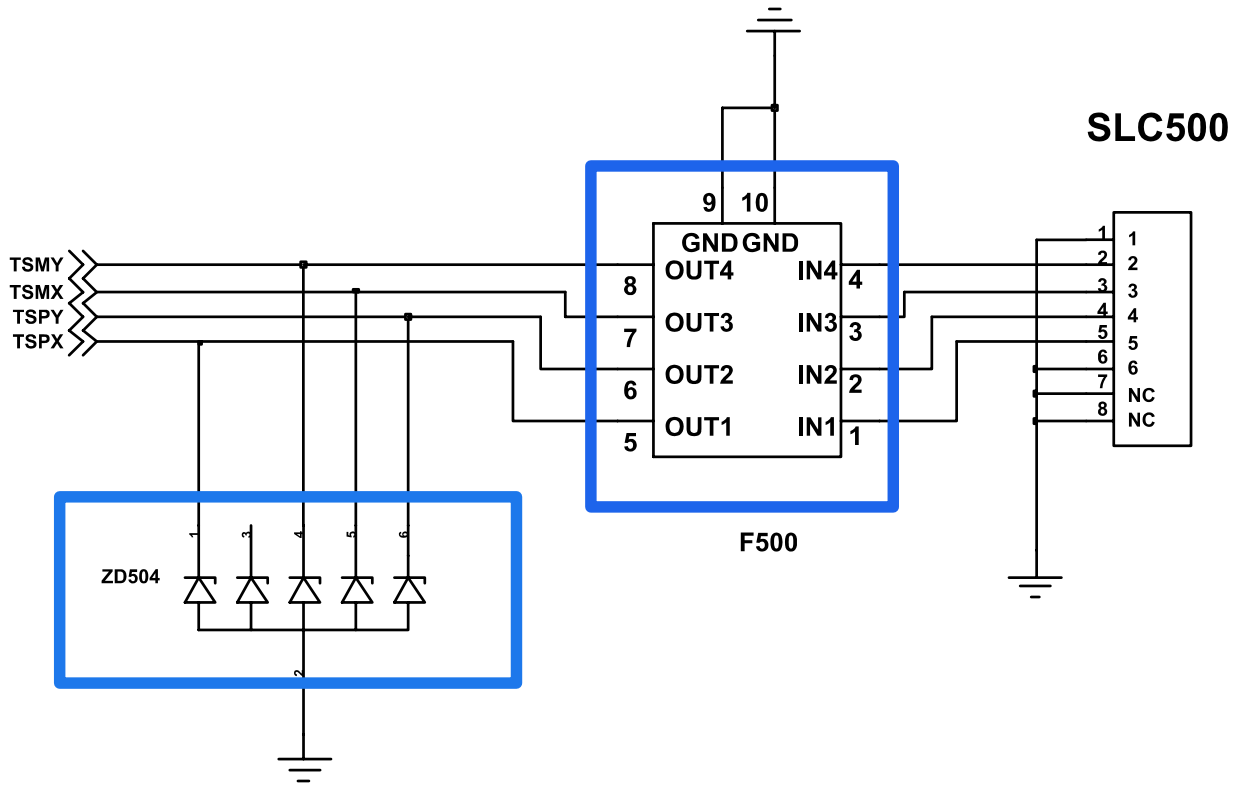


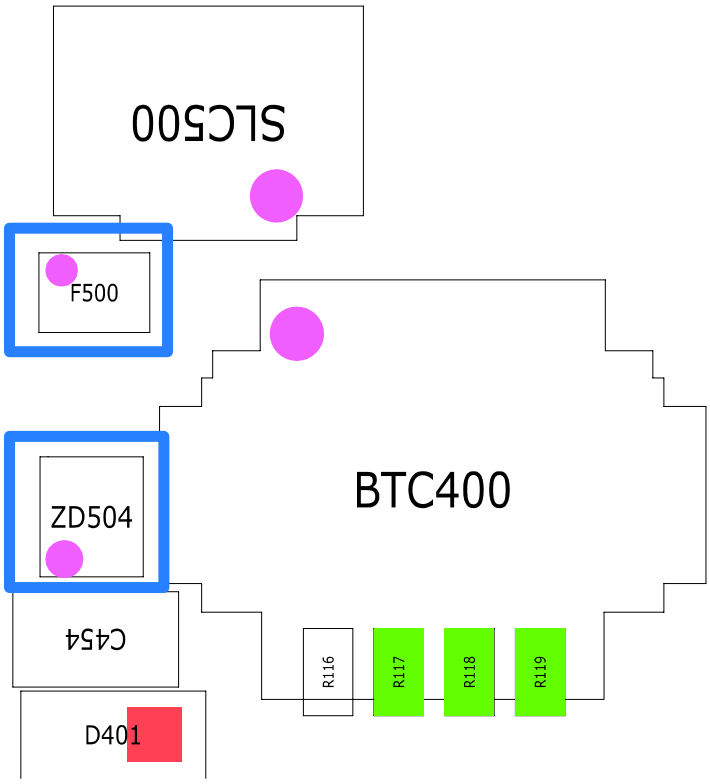




SAMSUNG Proprietary-Contents may change without notice
This Document can not be used without Samsung's authorization

8-3-3. Audio Working

- Speaker Working

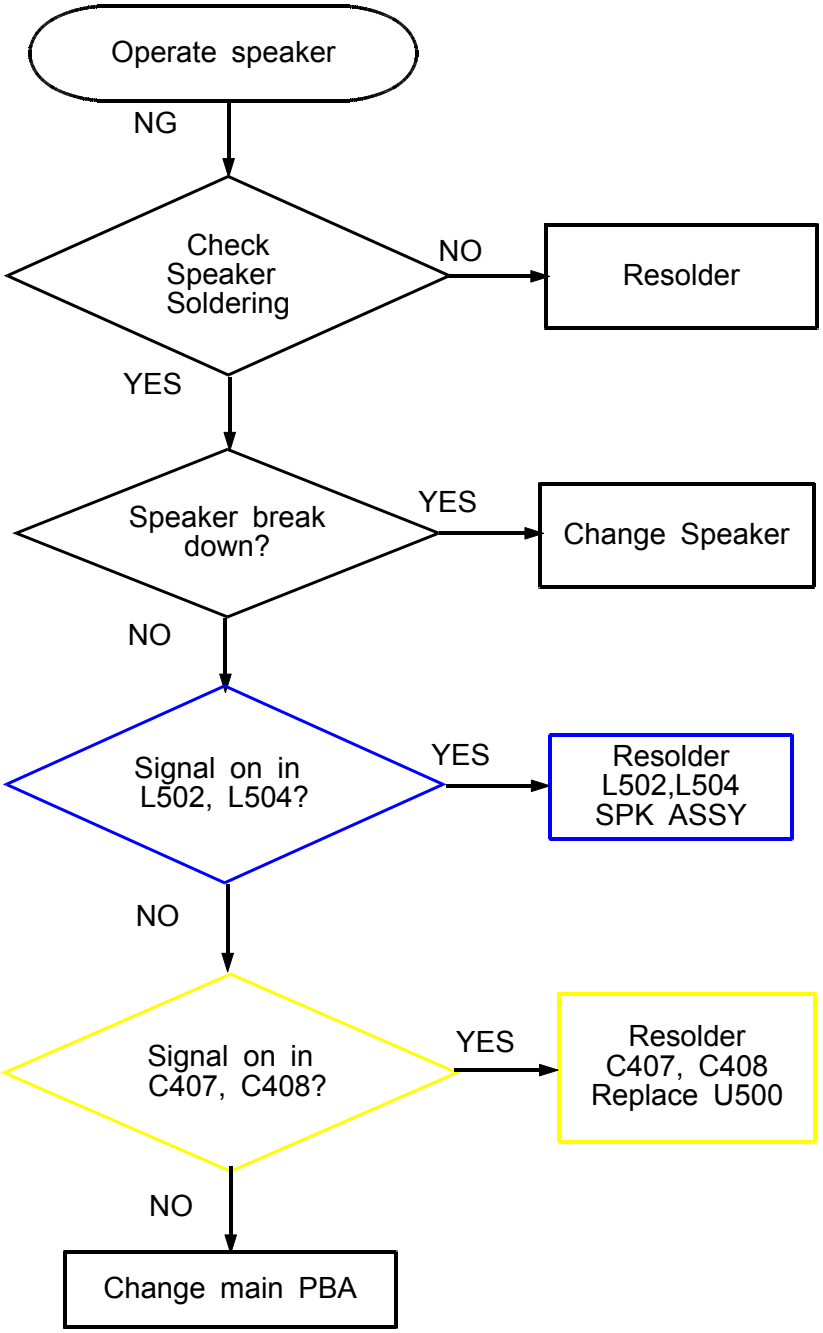




SAMSUNG Proprietary-Contents may change without notice
This Document can not be used without Samsung's authorization

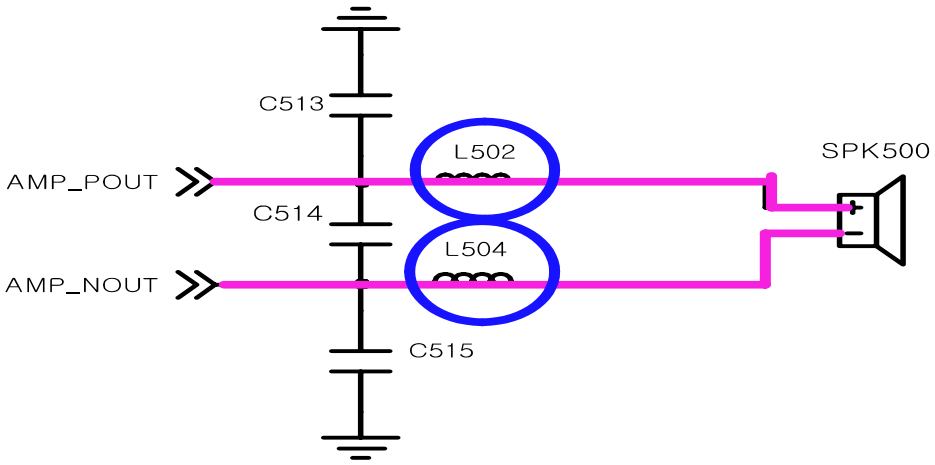


# SPK_CON

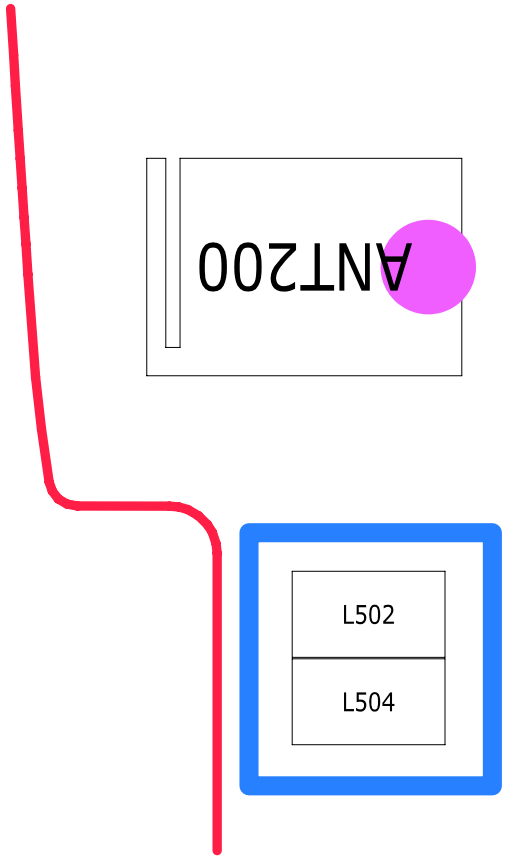




SAMSUNG Proprietary-Contents may change without notice
This Document can not be used without Samsung's authorization

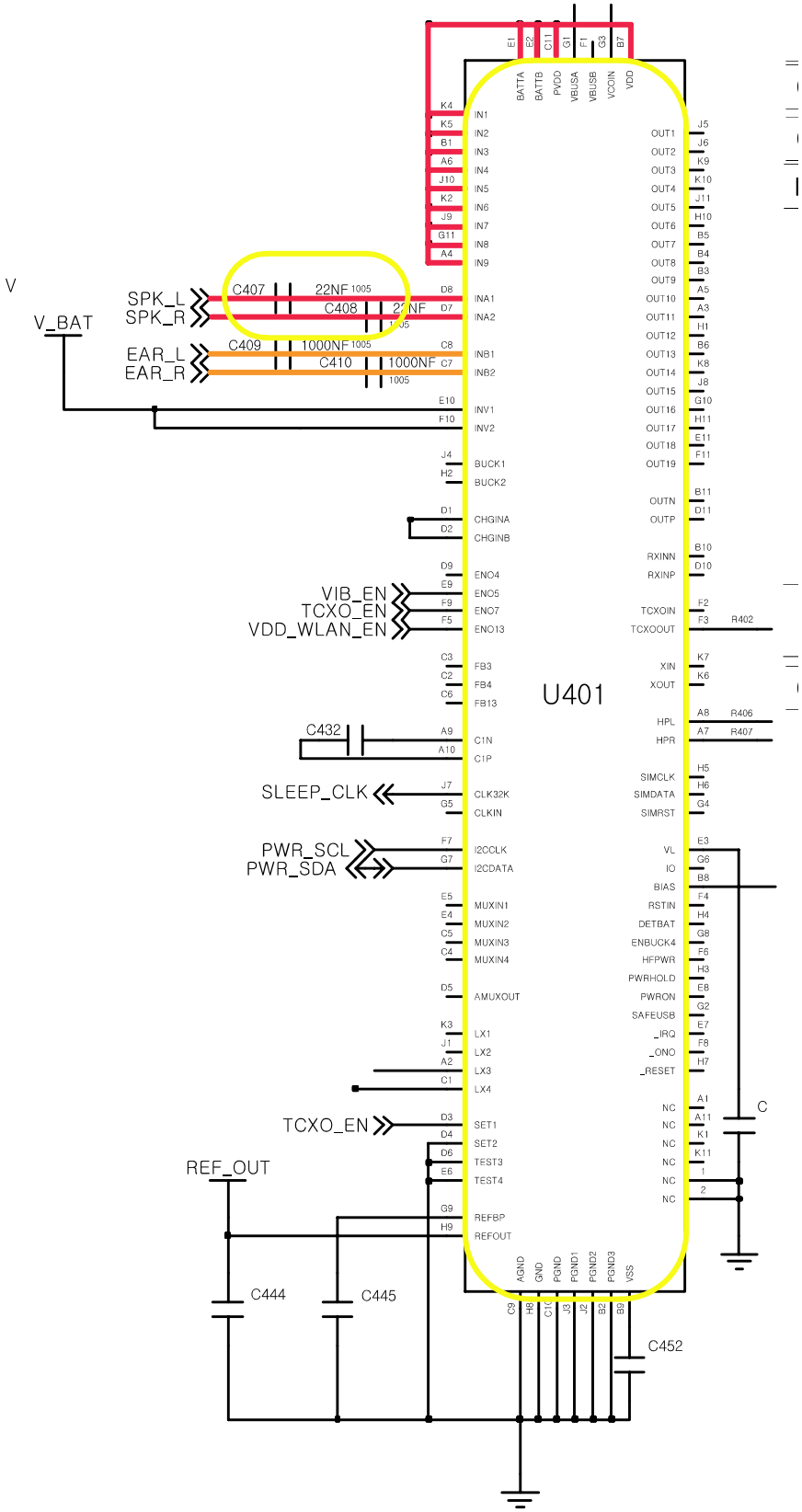




SAMSUNG Proprietary-Contents may change without notice
This Document can not be used without Samsung's authorization

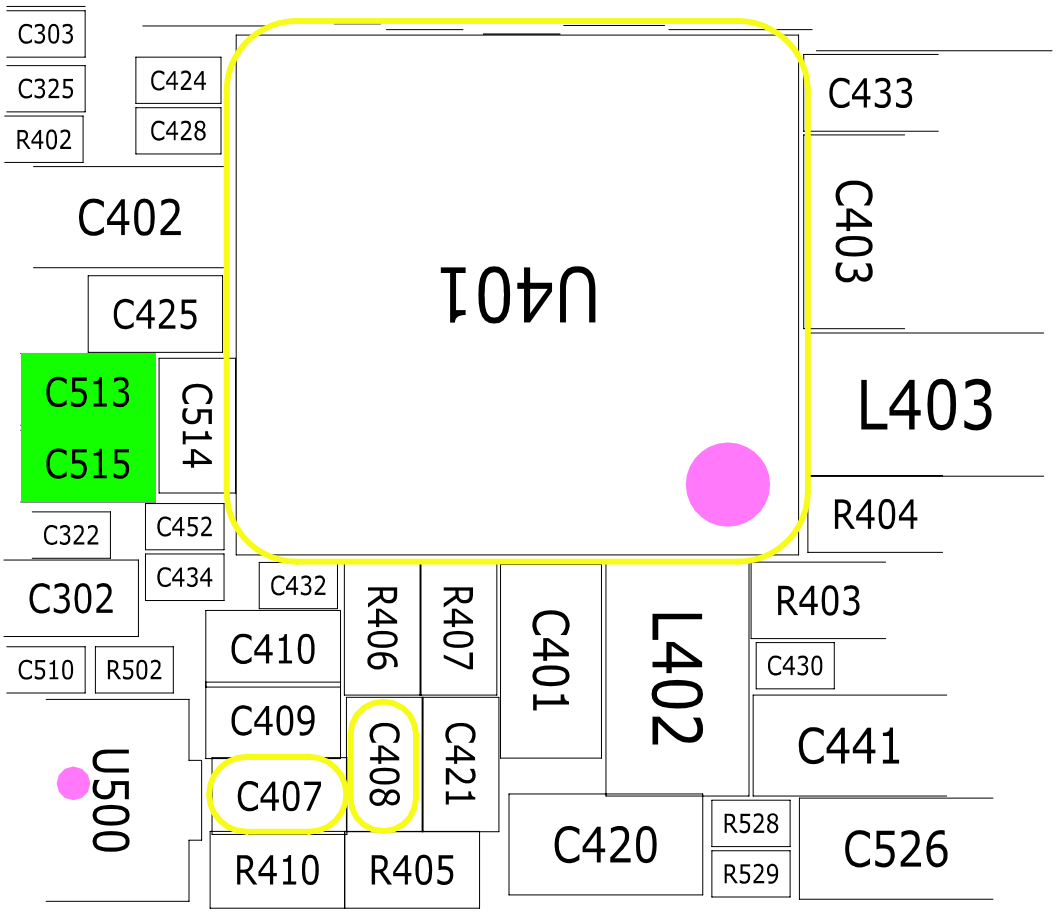




SAMSUNG Proprietary-Contents may change without notice
This Document can not be used without Samsung's authorization

- Receiver Working

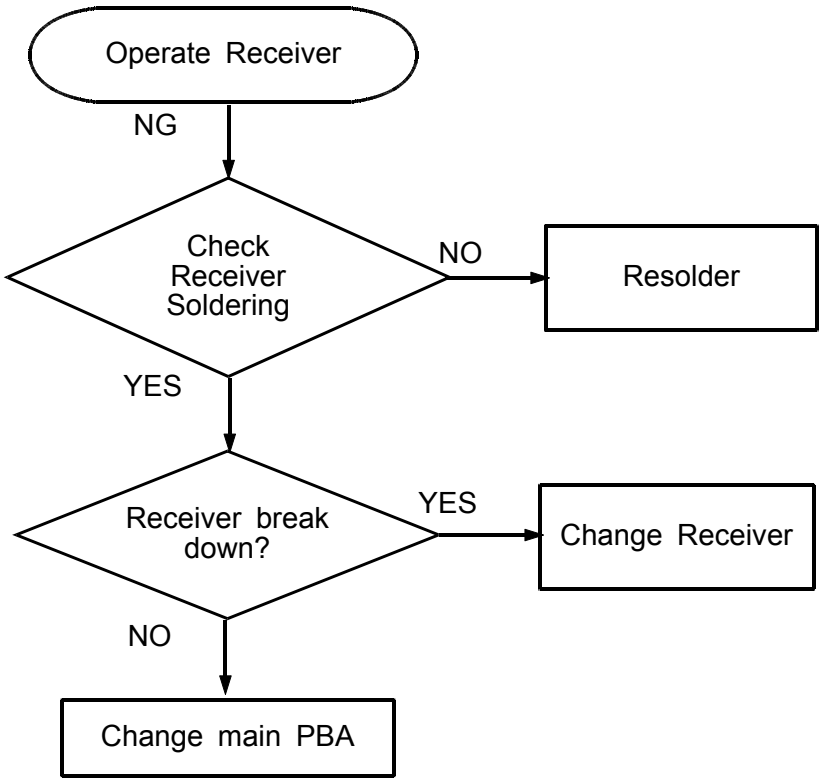




SAMSUNG Proprietary-Contents may change without notice
This Document can not be used without Samsung's authorization

- Main MIC Working

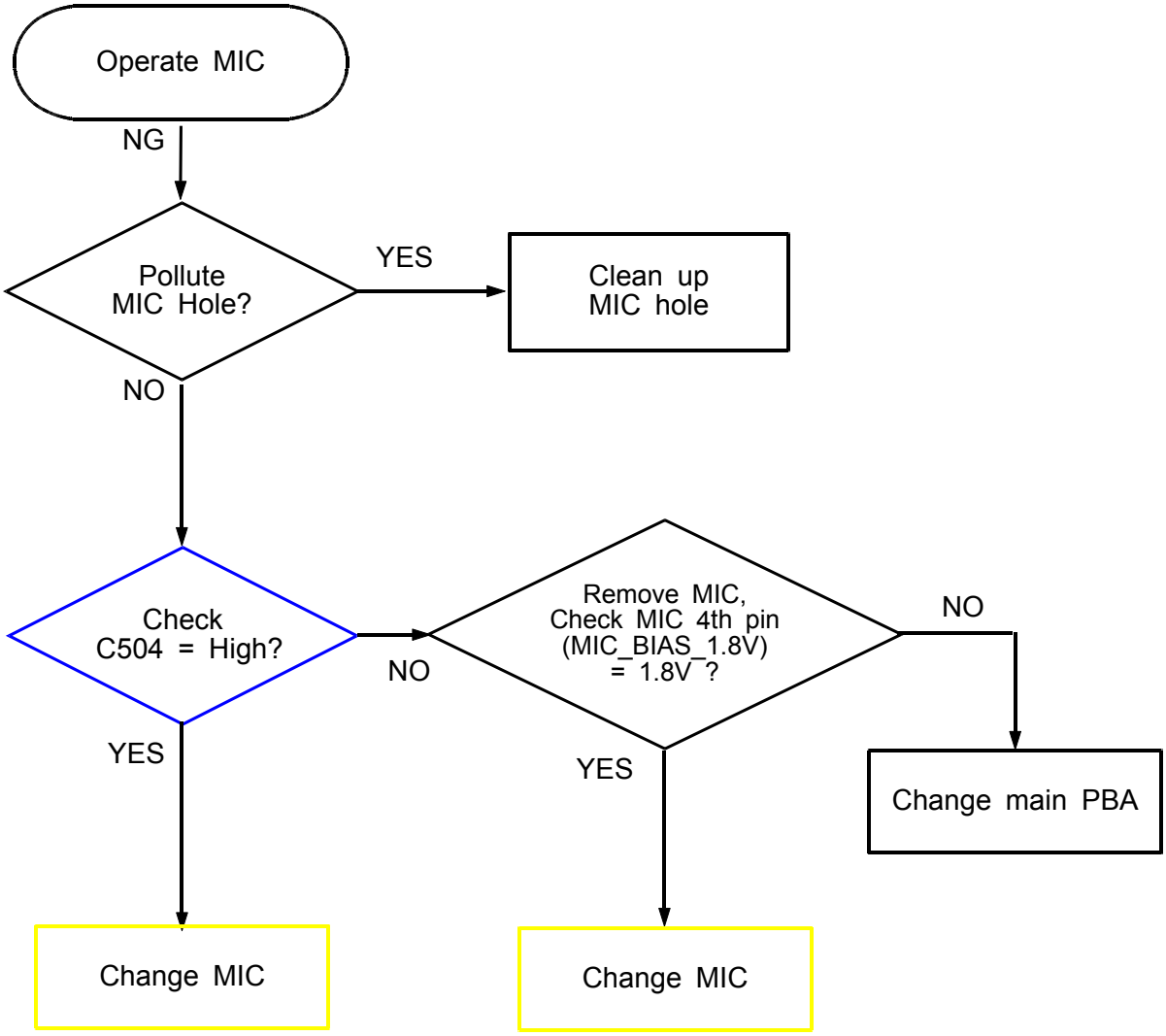




SAMSUNG Proprietary-Contents may change without notice
This Document can not be used without Samsung's authorization

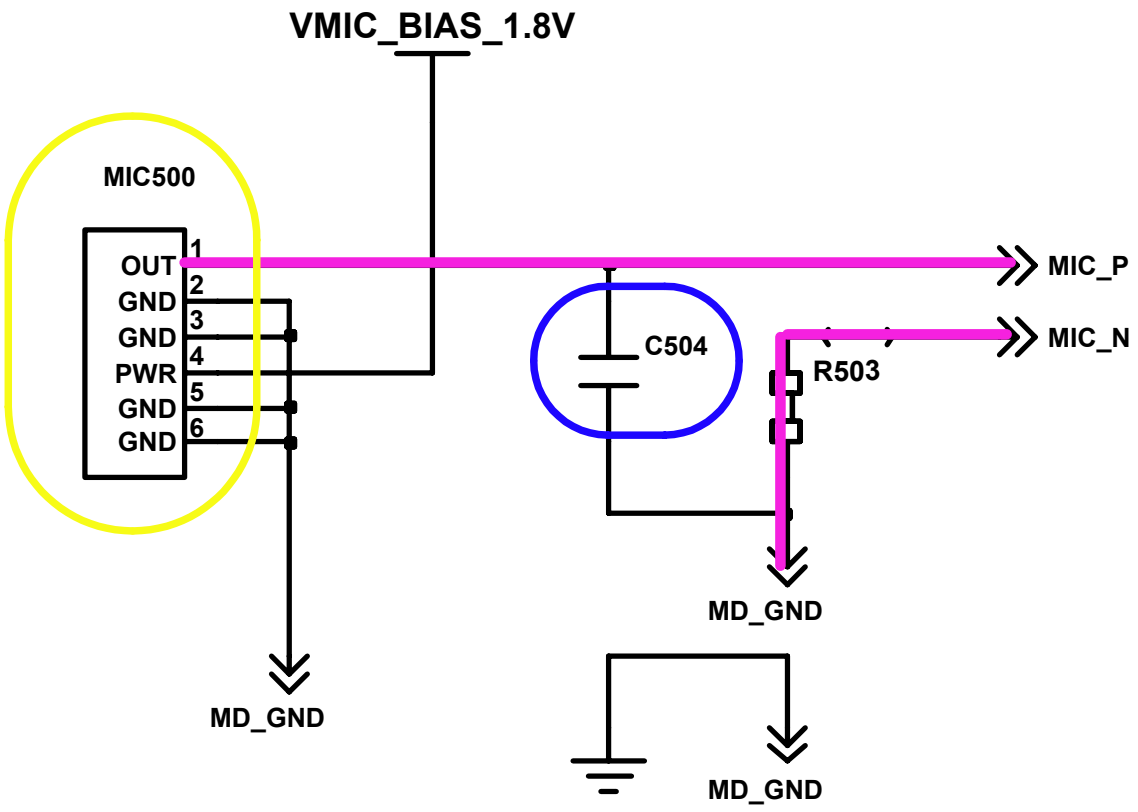


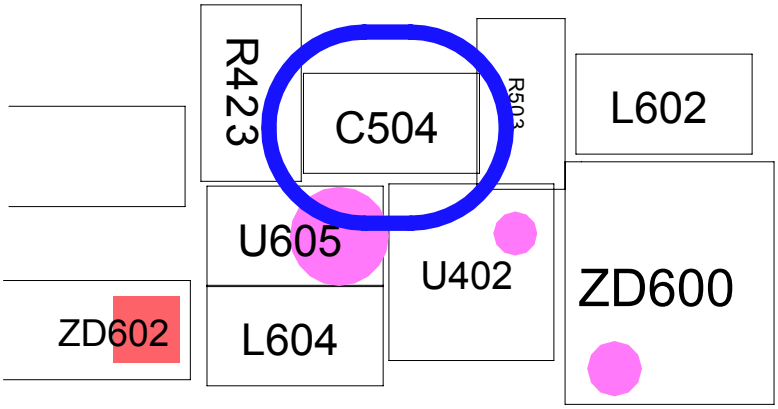




SAMSUNG Proprietary-Contents may change without notice
This Document can not be used without Samsung's authorization

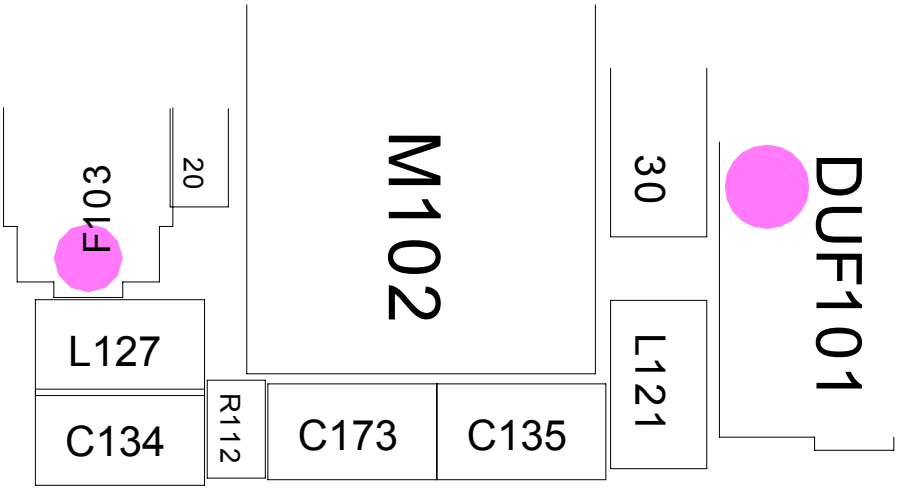


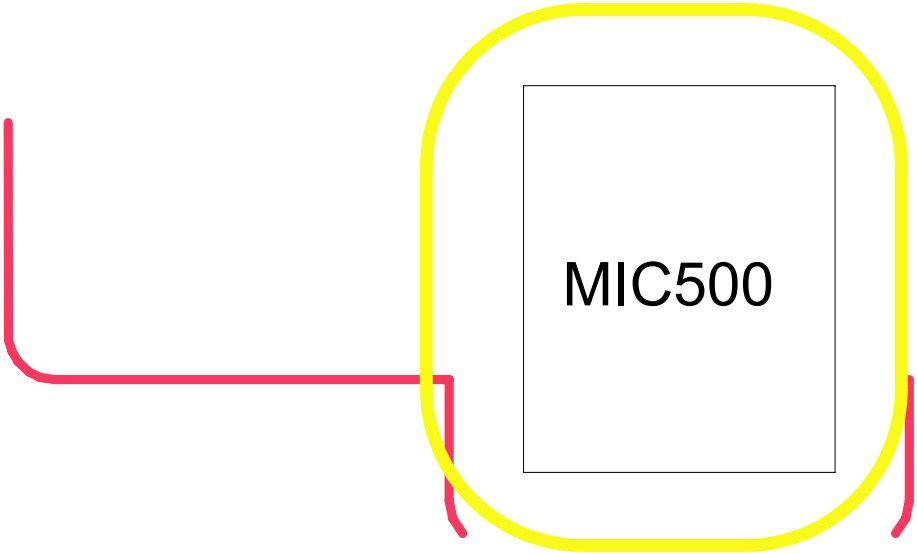




SAMSUNG Proprietary-Contents may change without notice
This Document can not be used without Samsung's authorization

- Sub MIC Working

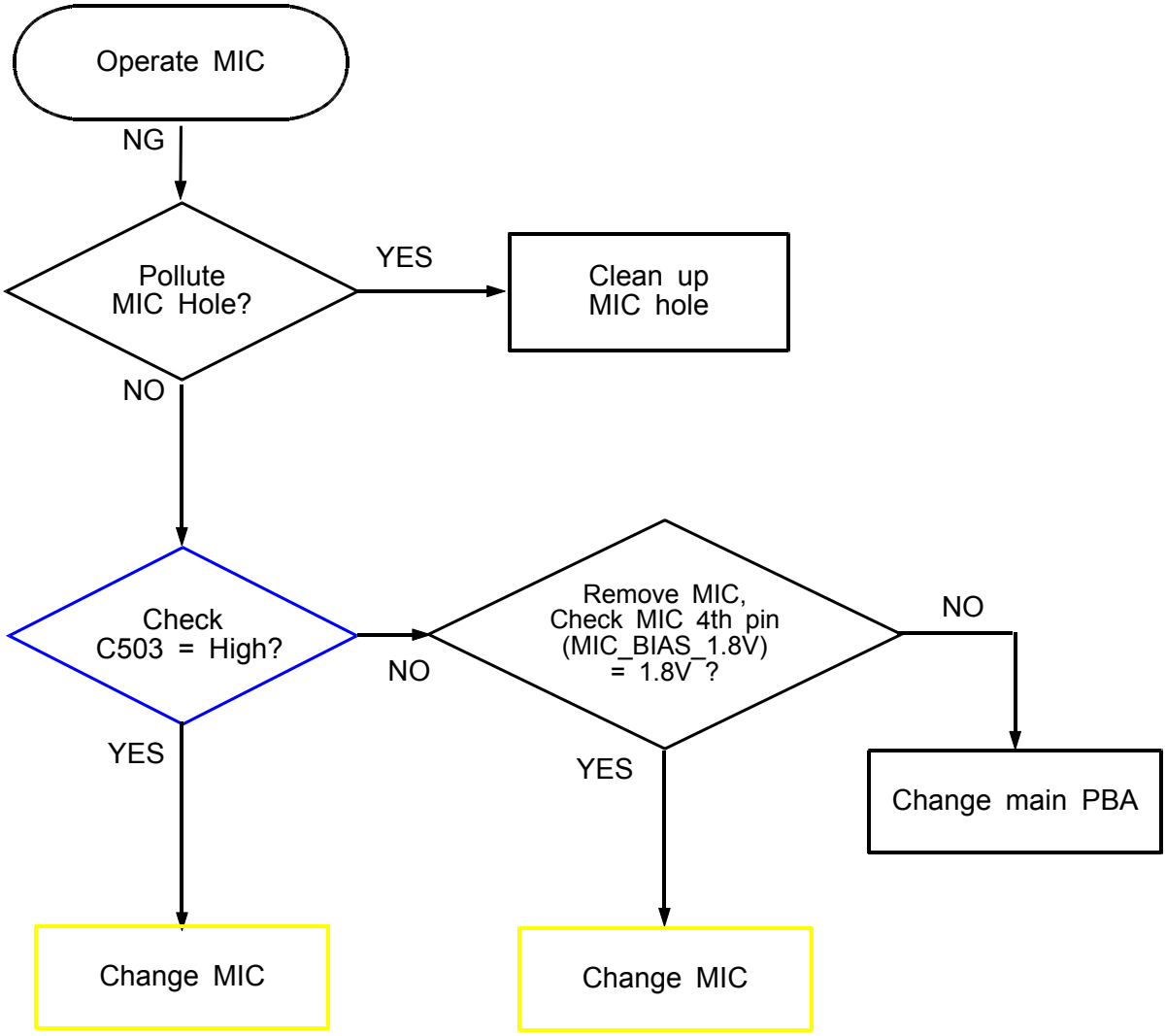




SAMSUNG Proprietary-Contents may change without notice
This Document can not be used without Samsung's authorization

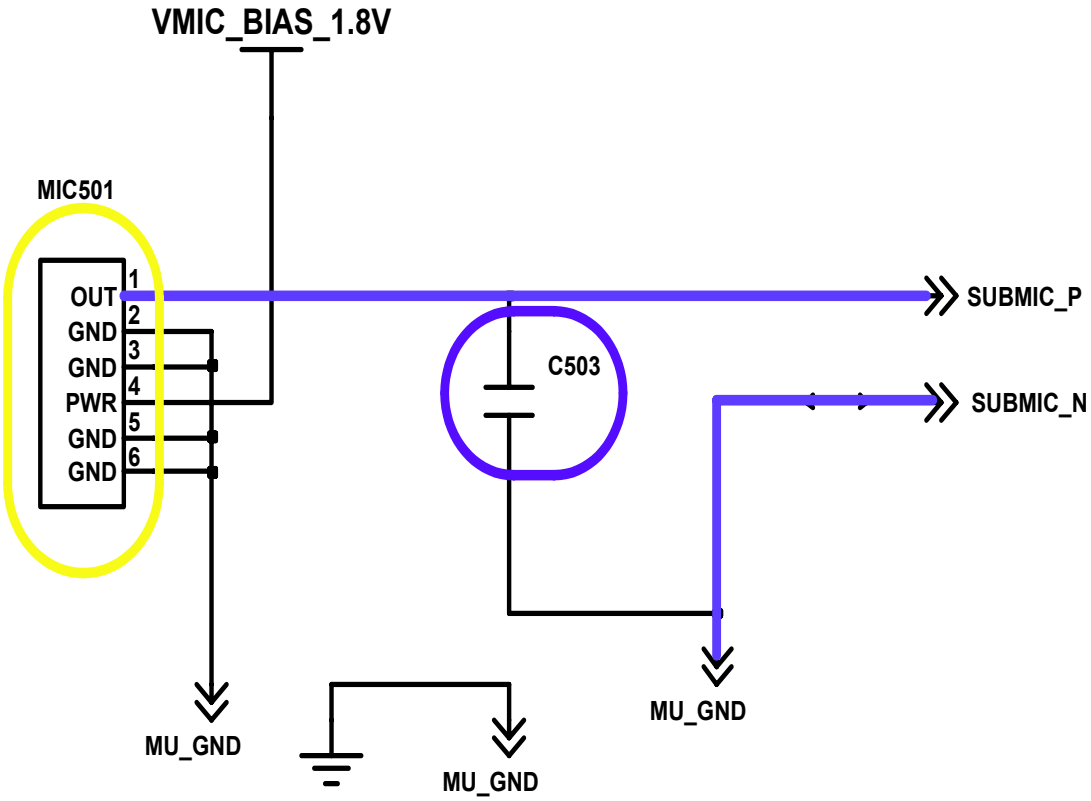


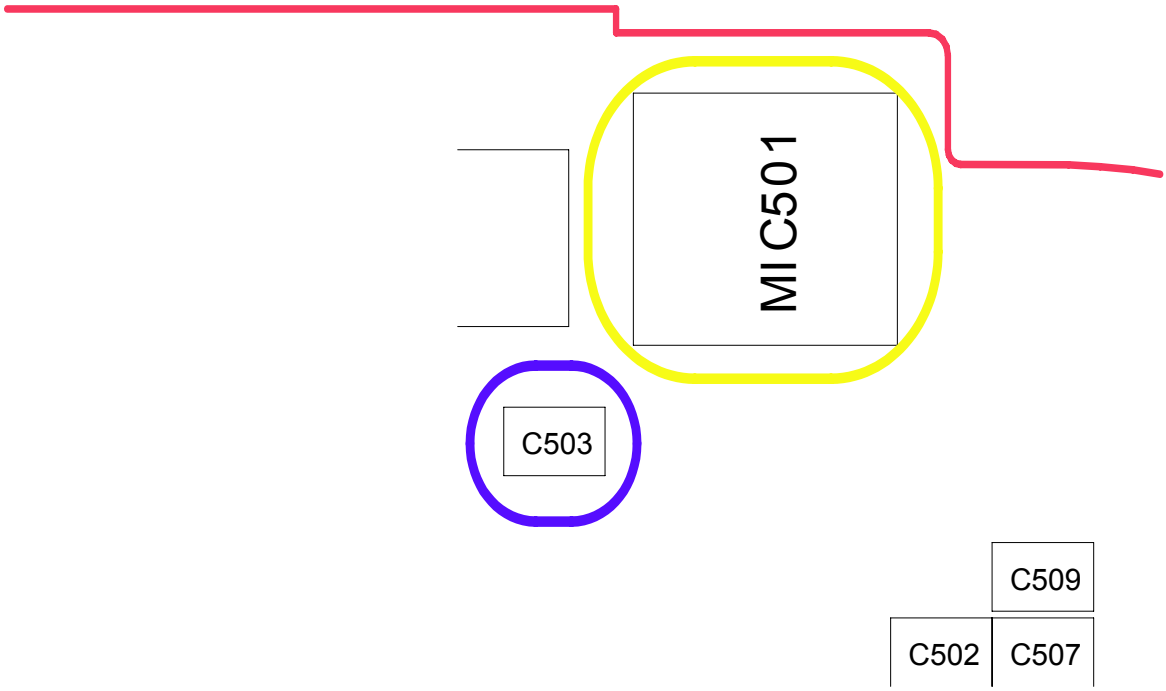




SAMSUNG Proprietary-Contents may change without notice
This Document can not be used without Samsung's authorization

● Stereo Headset Working

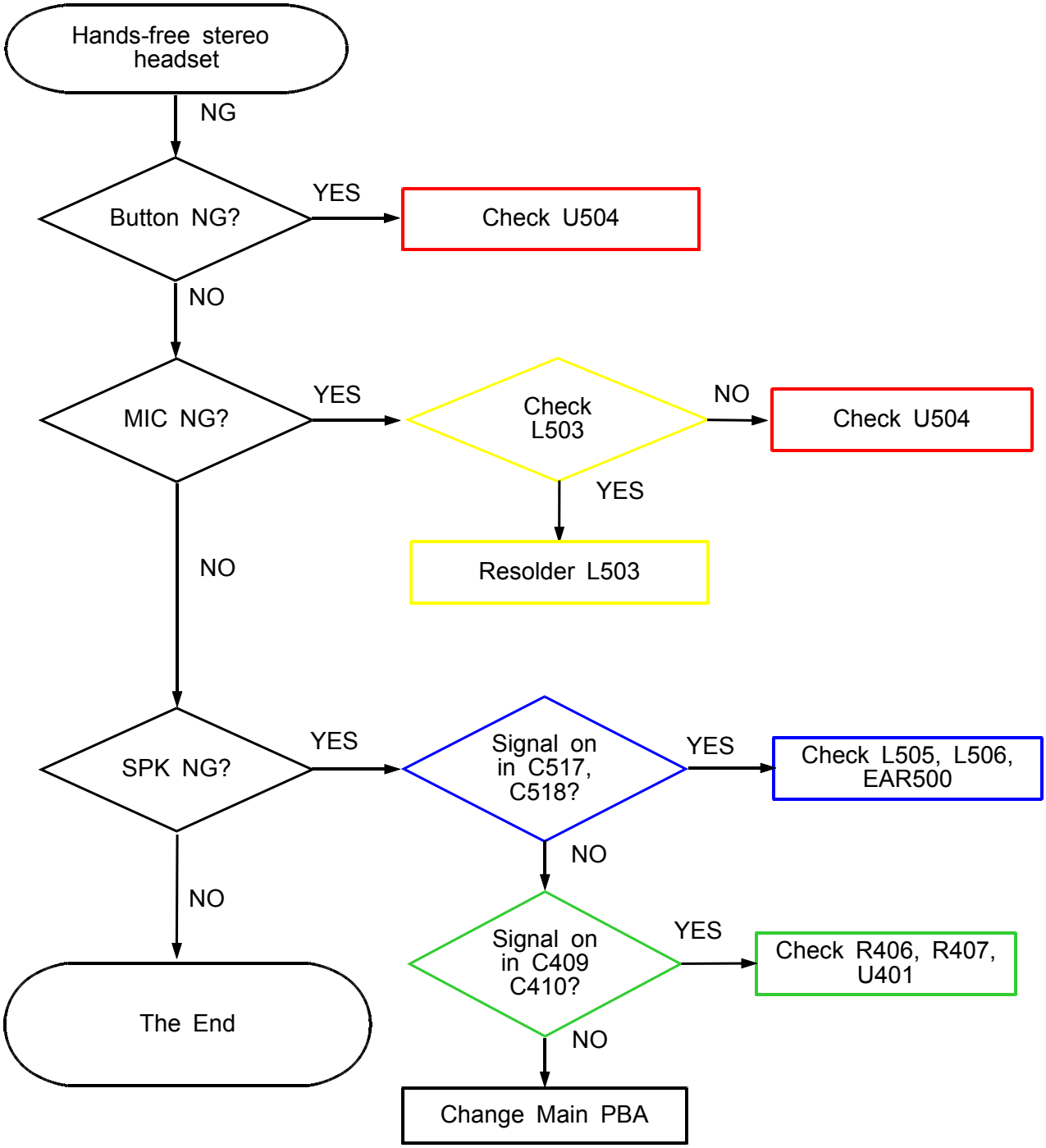




SAMSUNG Proprietary-Contents may change without notice
This Document can not be used without Samsung's authorization

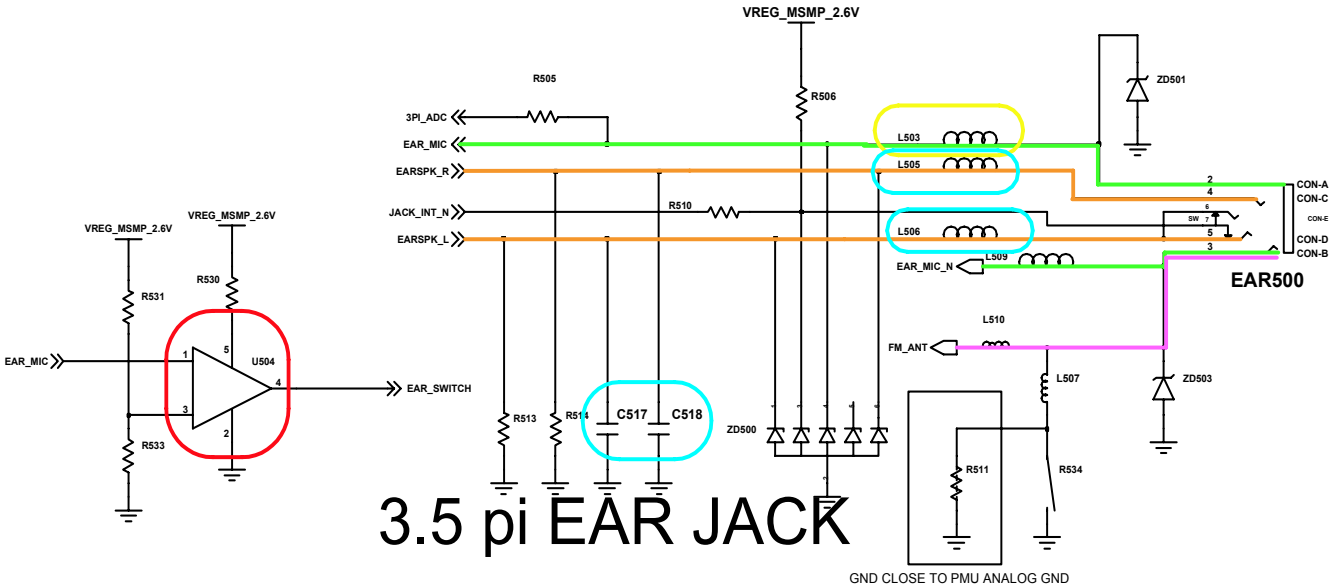


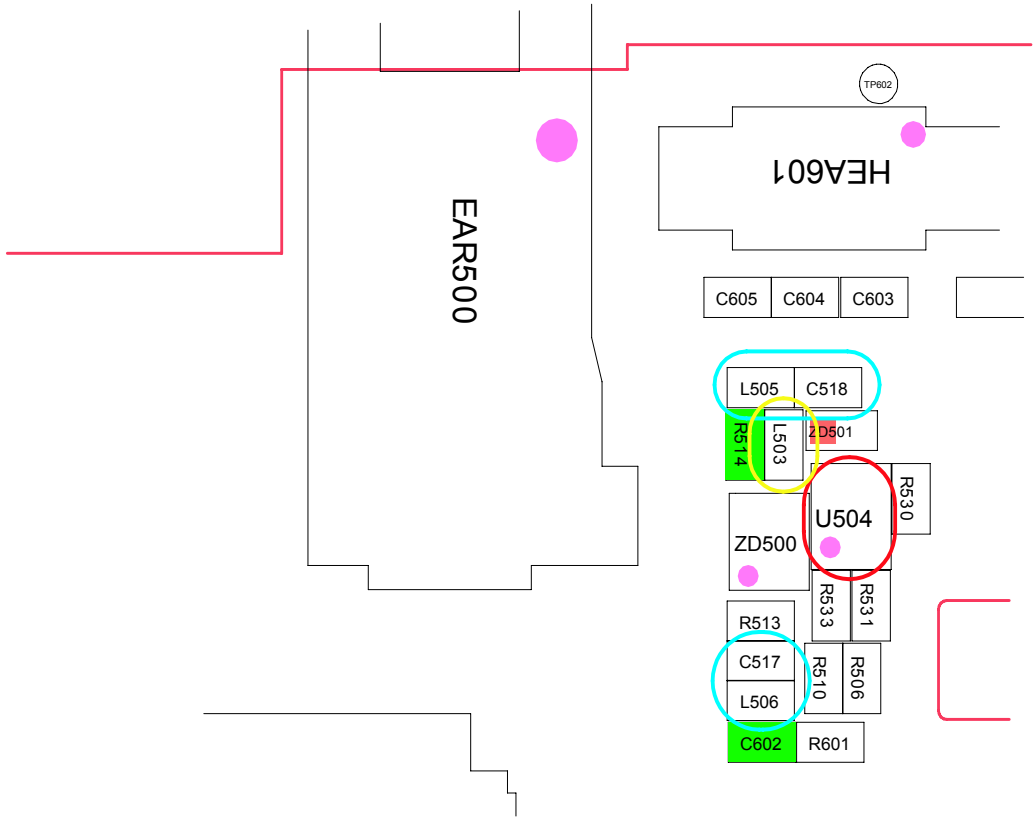




SAMSUNG Proprietary-Contents may change without notice
This Document can not be used without Samsung's authorization

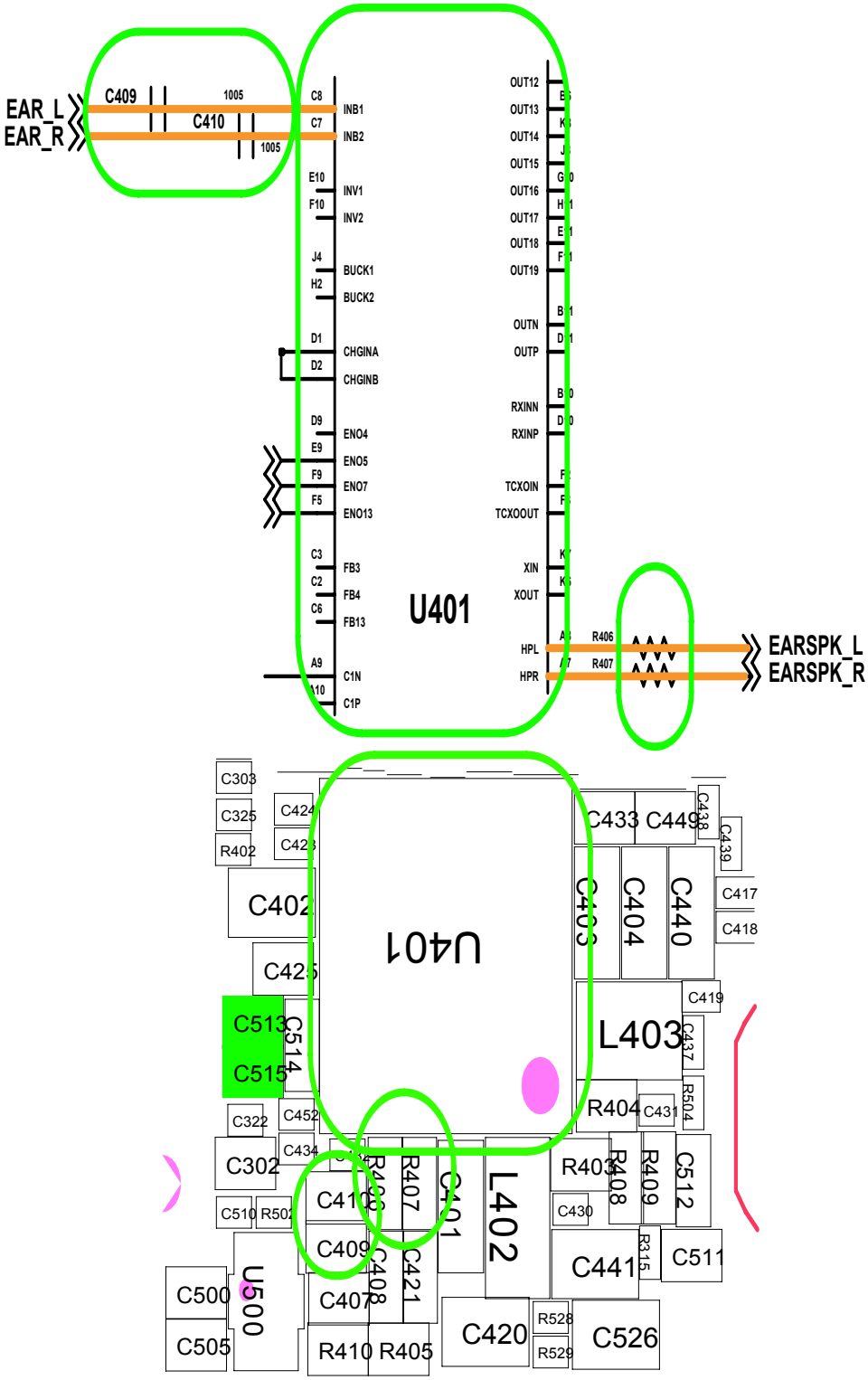




SAMSUNG Proprietary-Contents may change without notice
This Document can not be used without Samsung's authorization

8-3-5. KEY Working

- Volume KEY

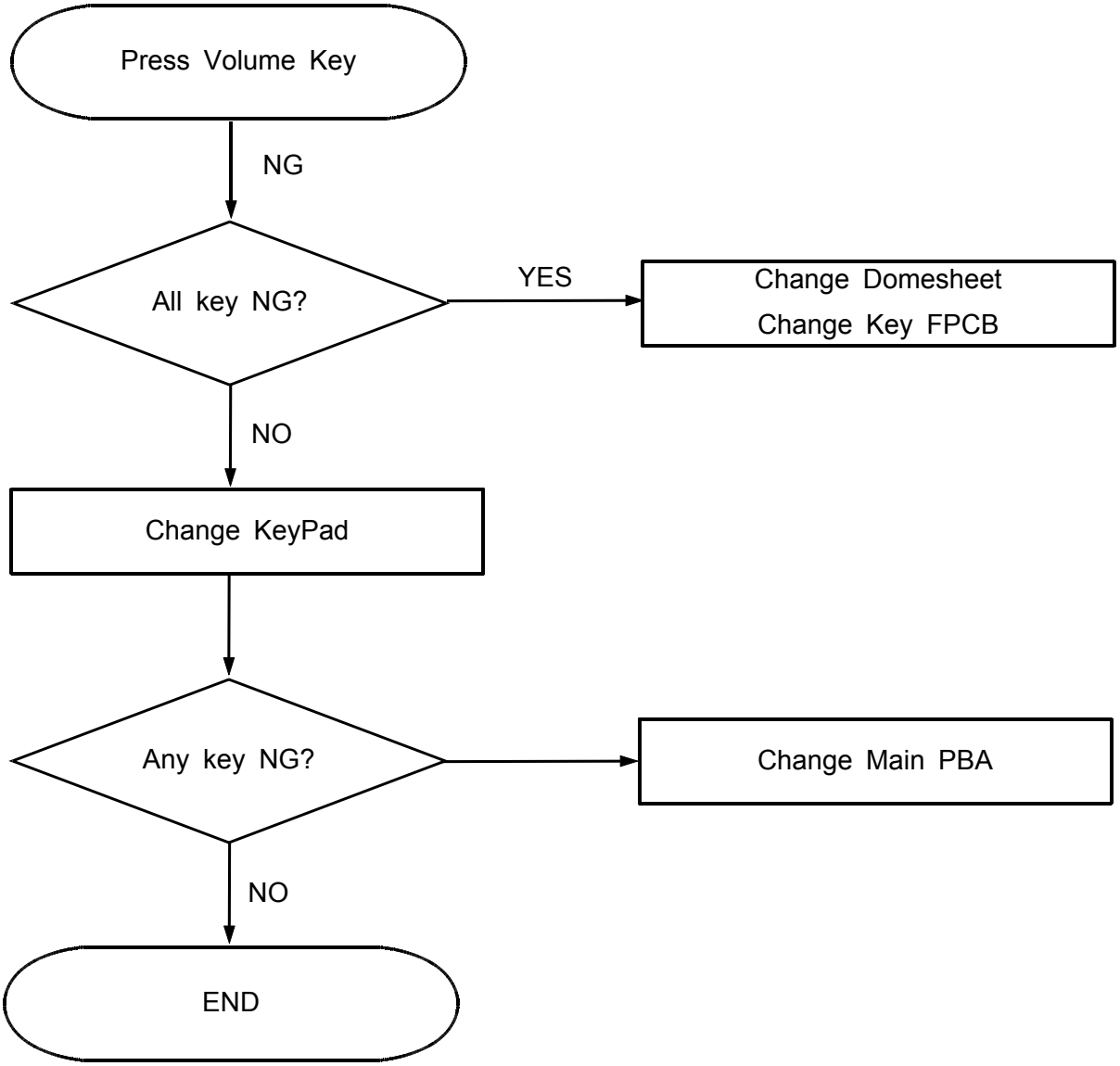




SAMSUNG Proprietary-Contents may change without notice
This Document can not be used without Samsung's authorization

- Sub Key

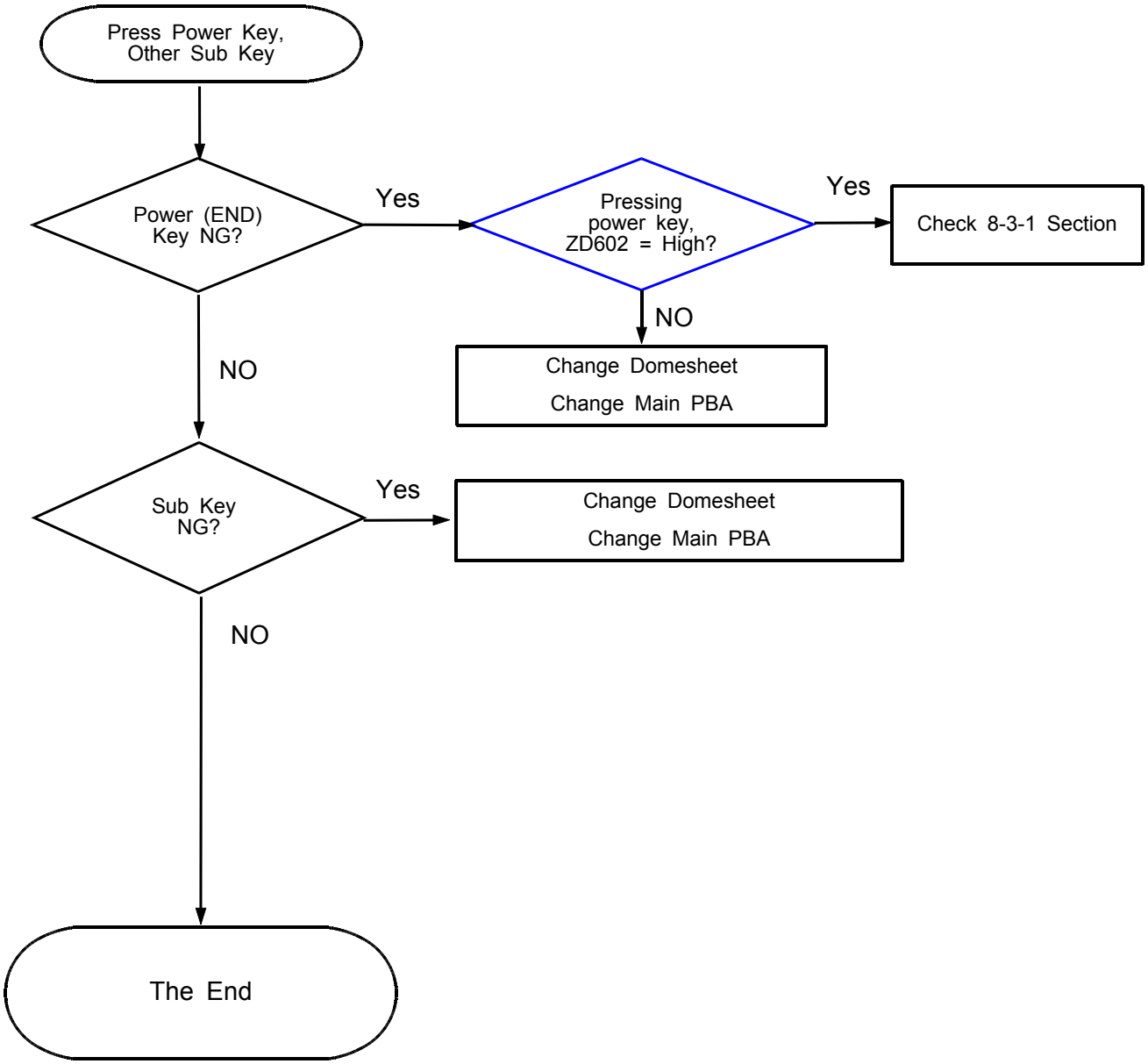




SAMSUNG Proprietary-Contents may change without notice
This Document can not be used without Samsung's authorization

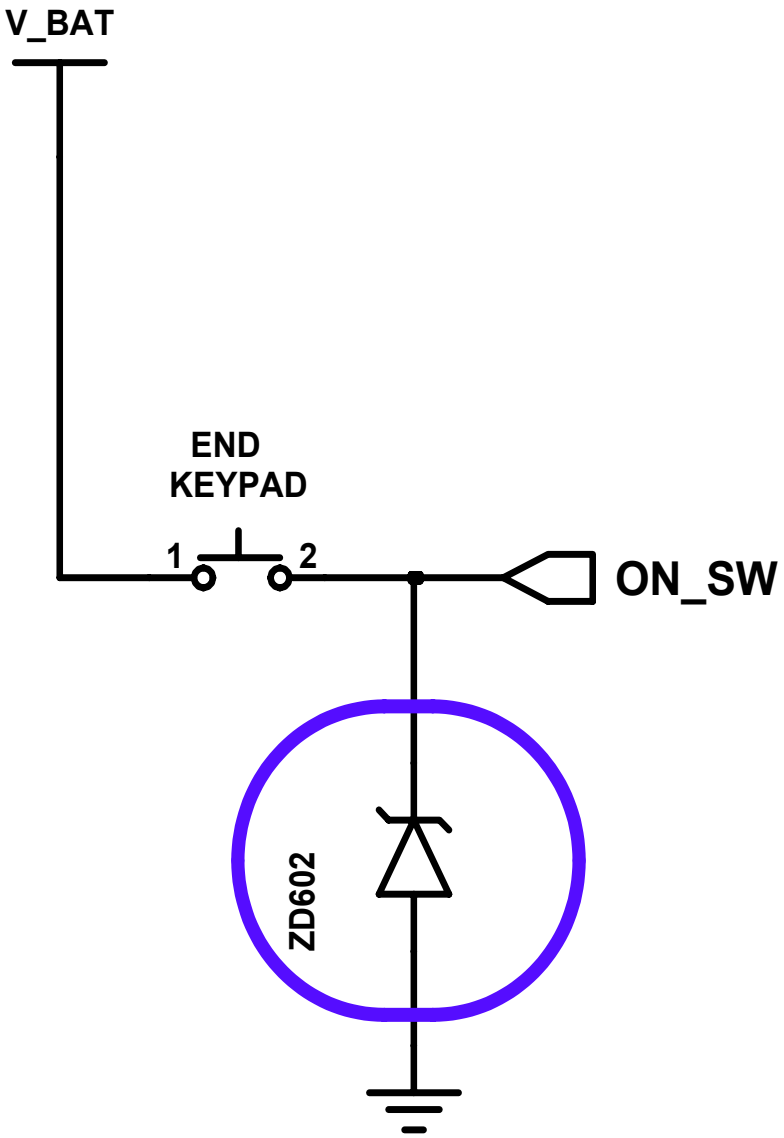


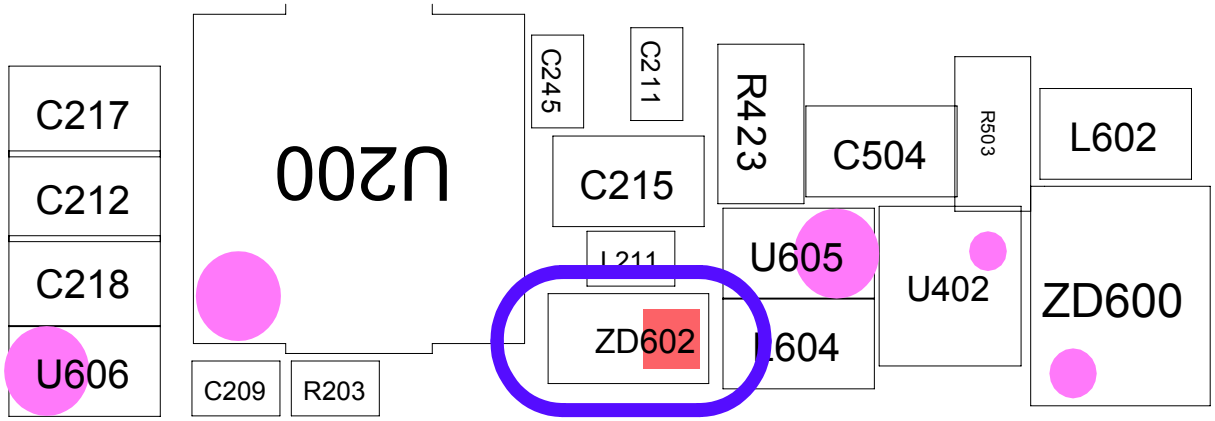




SAMSUNG Proprietary-Contents may change without notice
This Document can not be used without Samsung's authorization

## 8-3-6. Vibrator Working

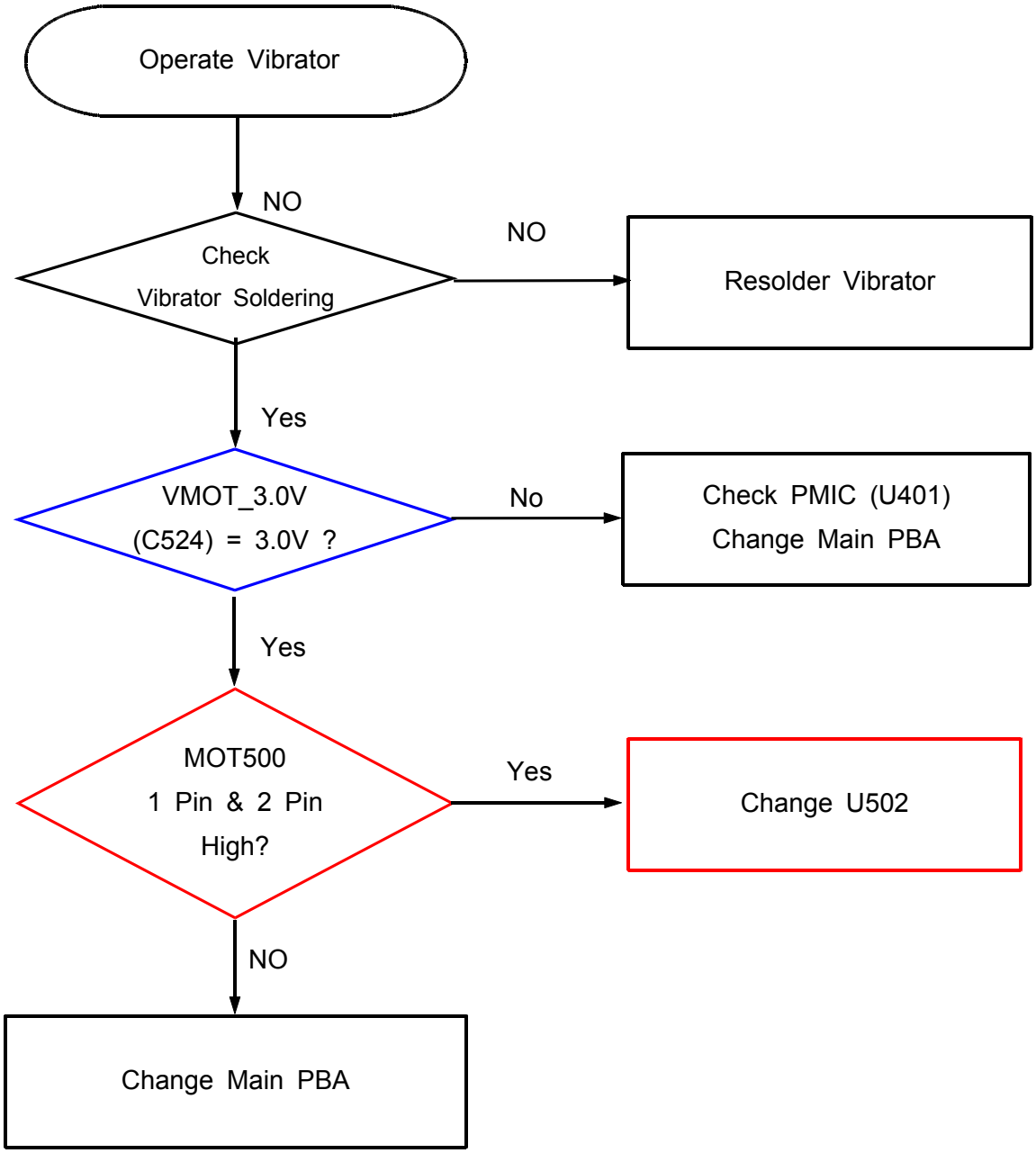




SAMSUNG Proprietary-Contents may change without notice
This Document can not be used without Samsung's authorization

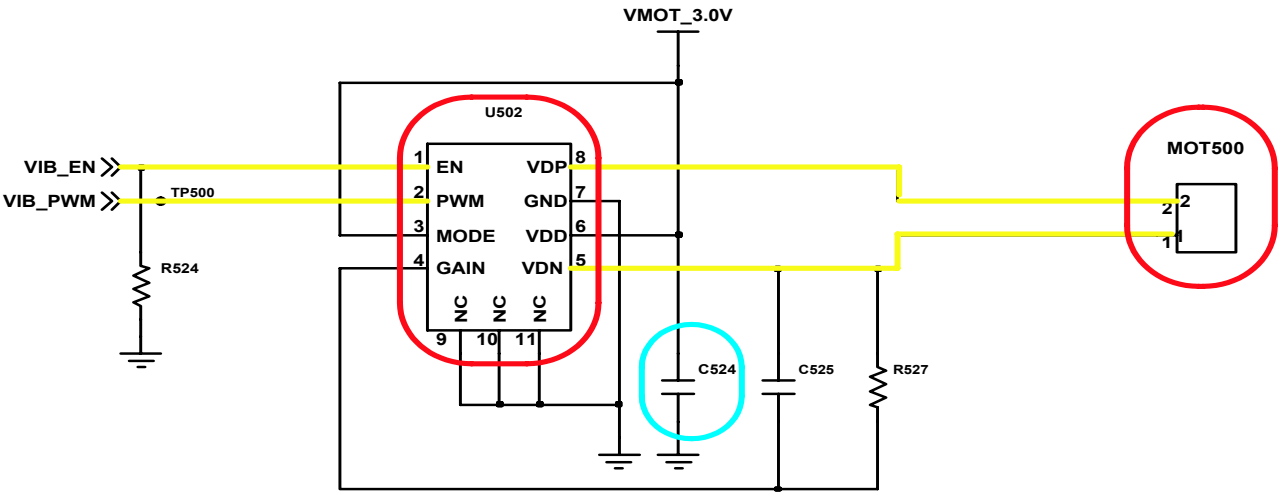


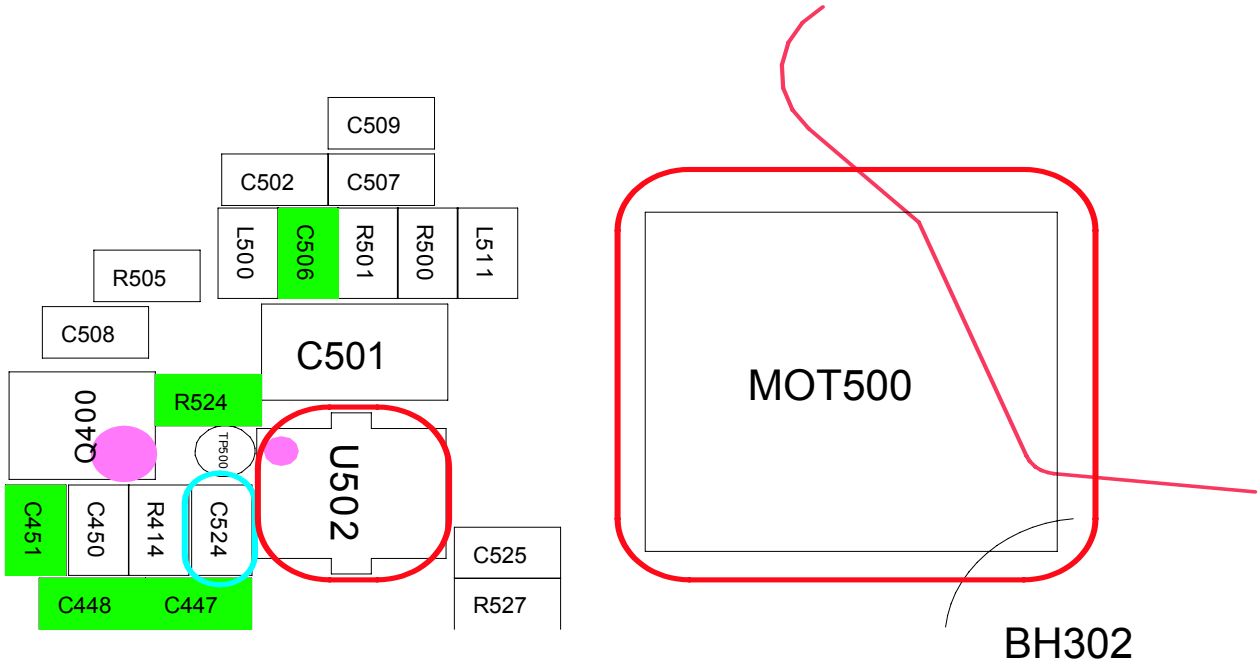




SAMSUNG Proprietary-Contents may change without notice
This Document can not be used without Samsung's authorization

## 8-3-7. T-Flash Card Working

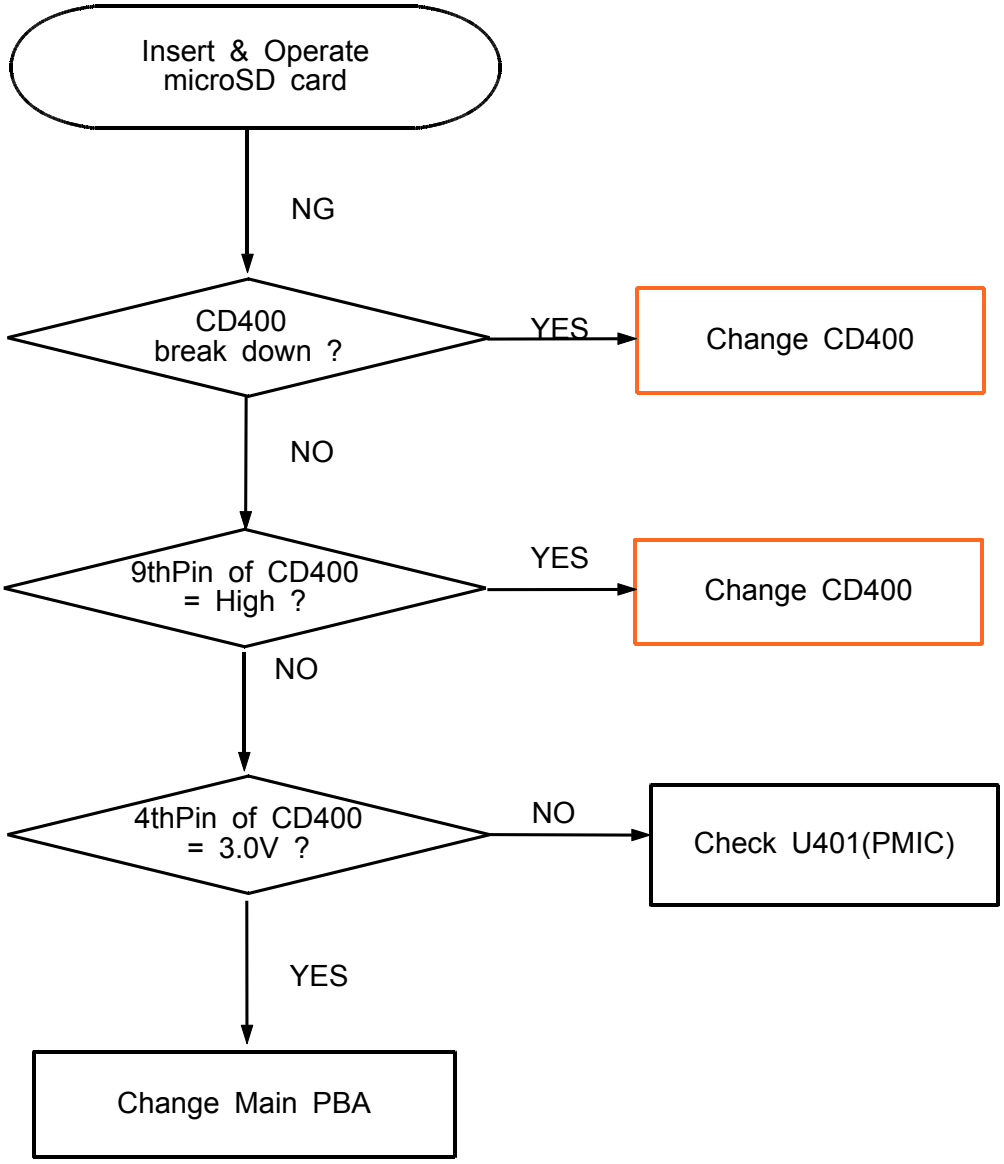




SAMSUNG Proprietary-Contents may change without notice
This Document can not be used without Samsung's authorization

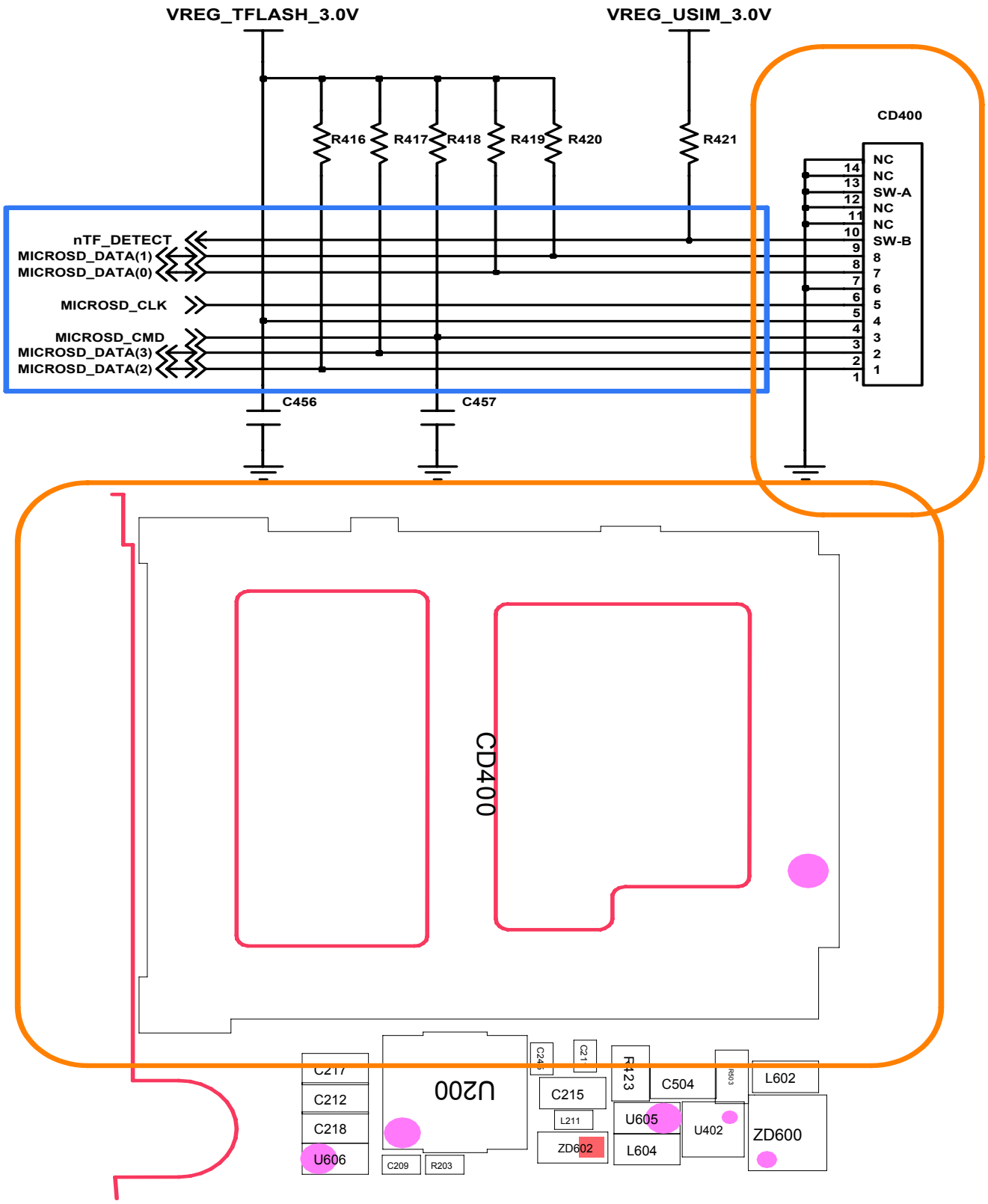




SAMSUNG Proprietary-Contents may change without notice
This Document can not be used without Samsung's authorization

## 8-3-8. SIM Card Working

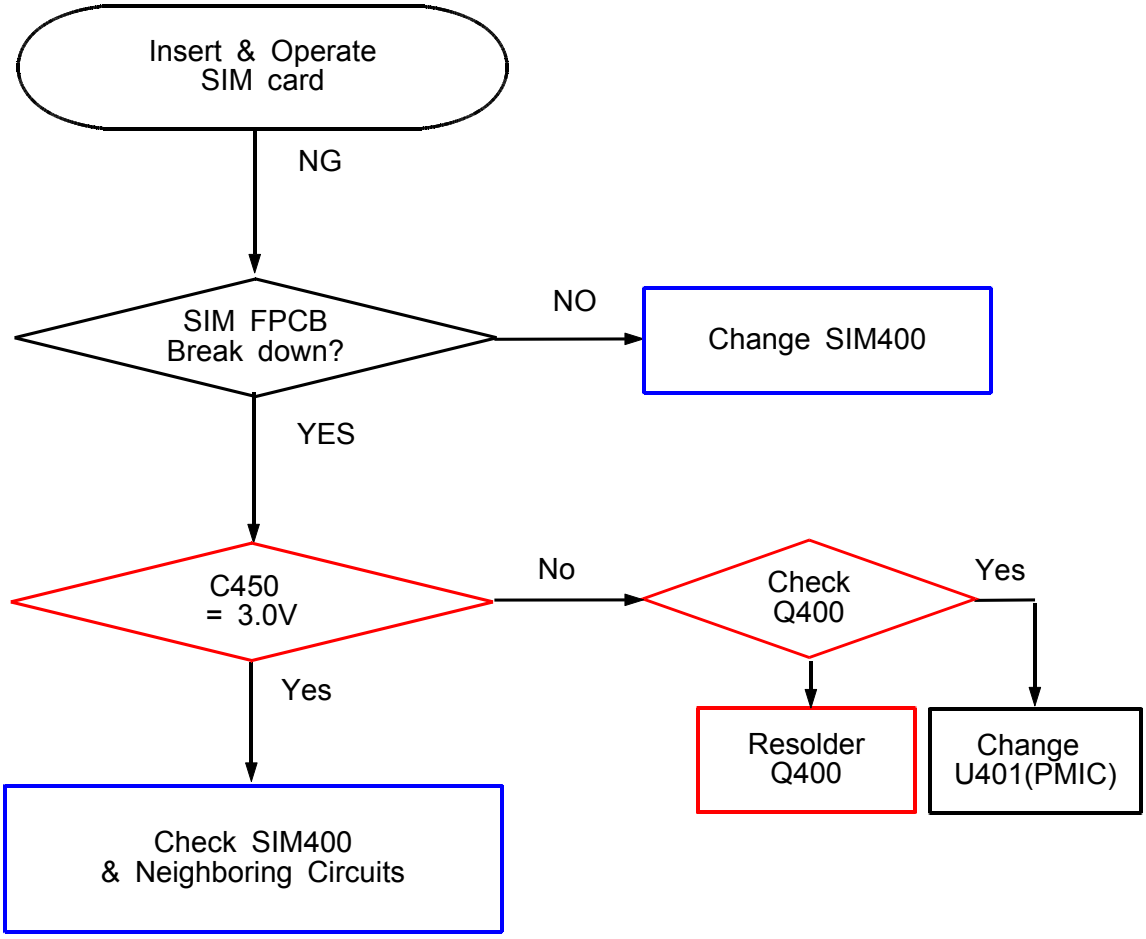




SAMSUNG Proprietary-Contents may change without notice
This Document can not be used without Samsung's authorization

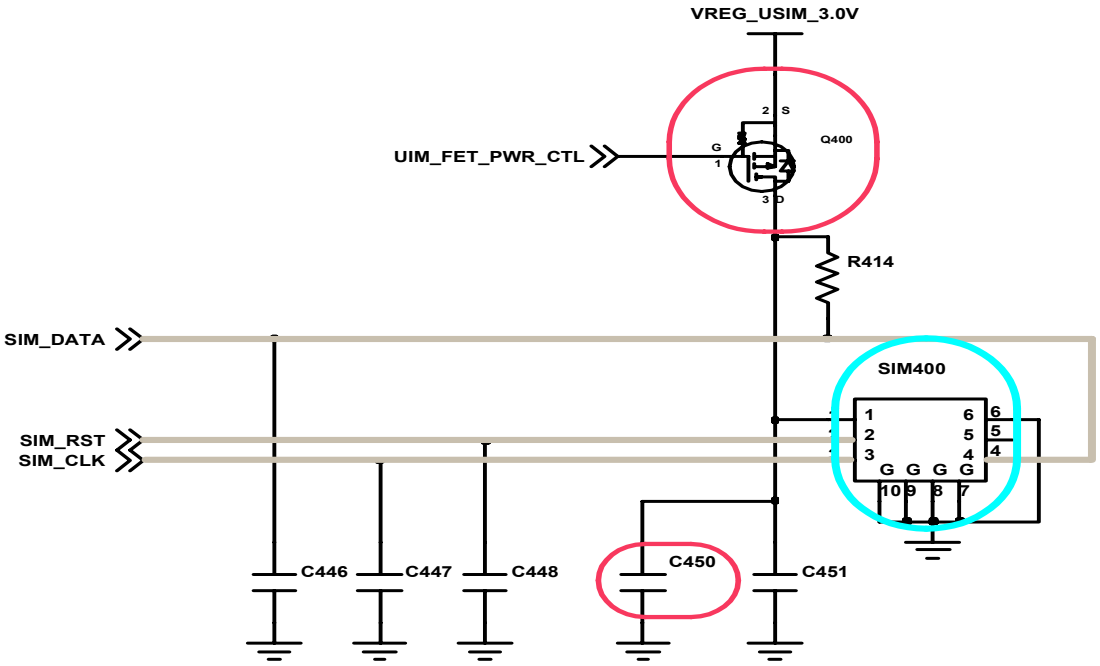


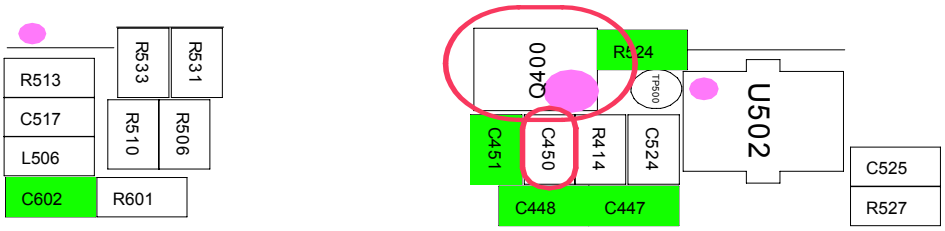


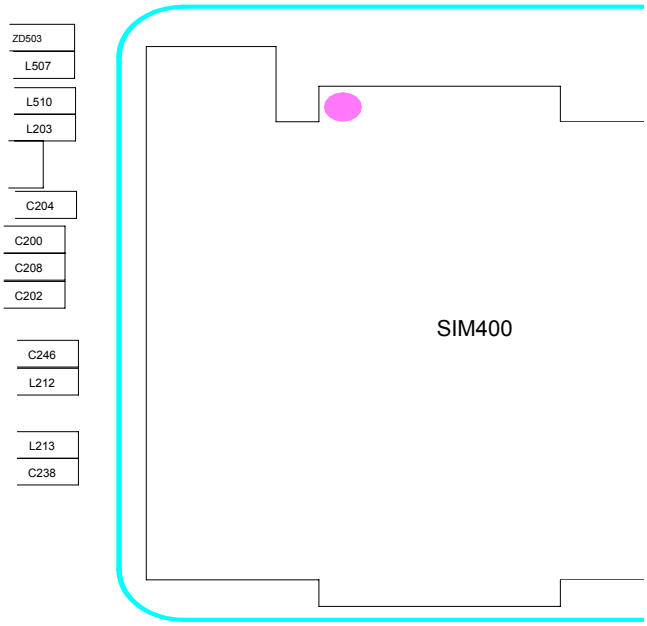




SAMSUNG Proprietary-Contents may change without notice
This Document can not be used without Samsung's authorization

## 8-3-9 CAMERA Working

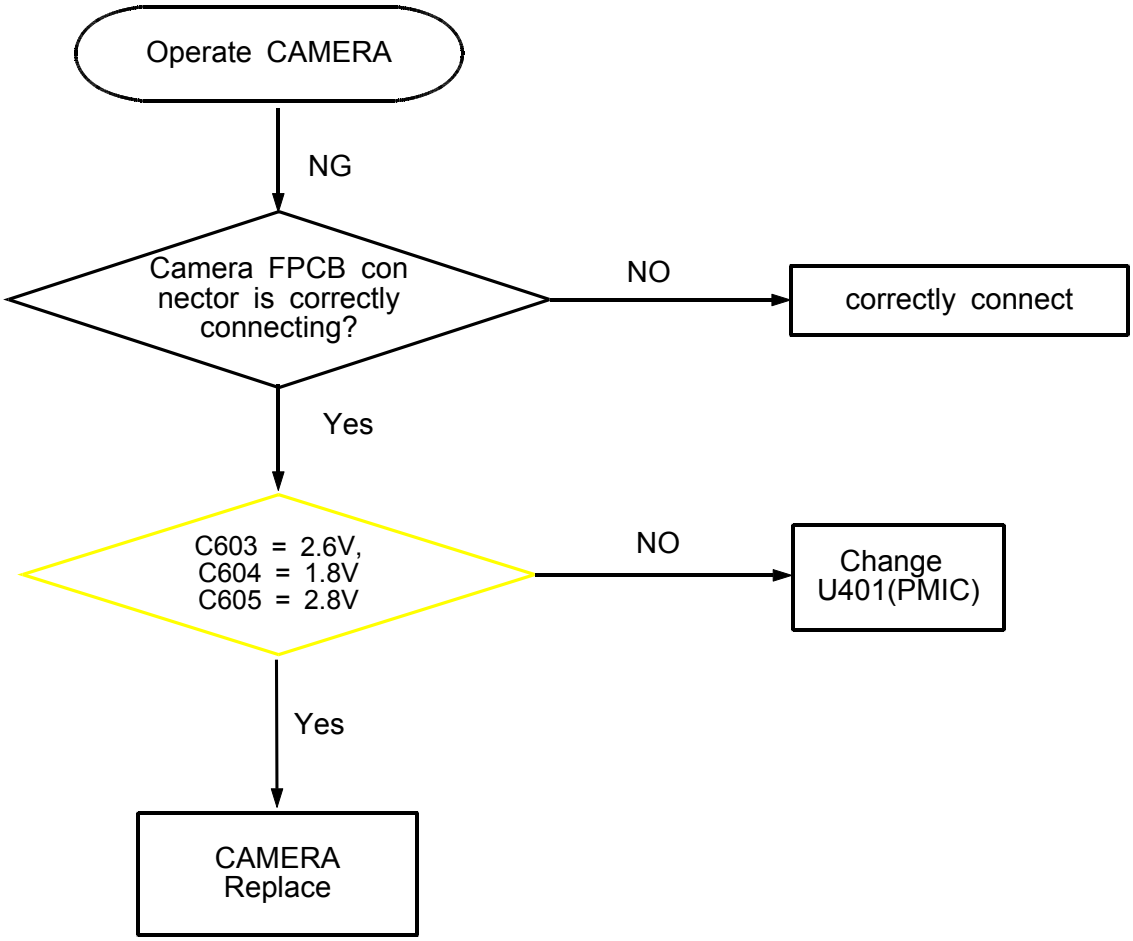




SAMSUNG Proprietary-Contents may change without notice
This Document can not be used without Samsung's authorization

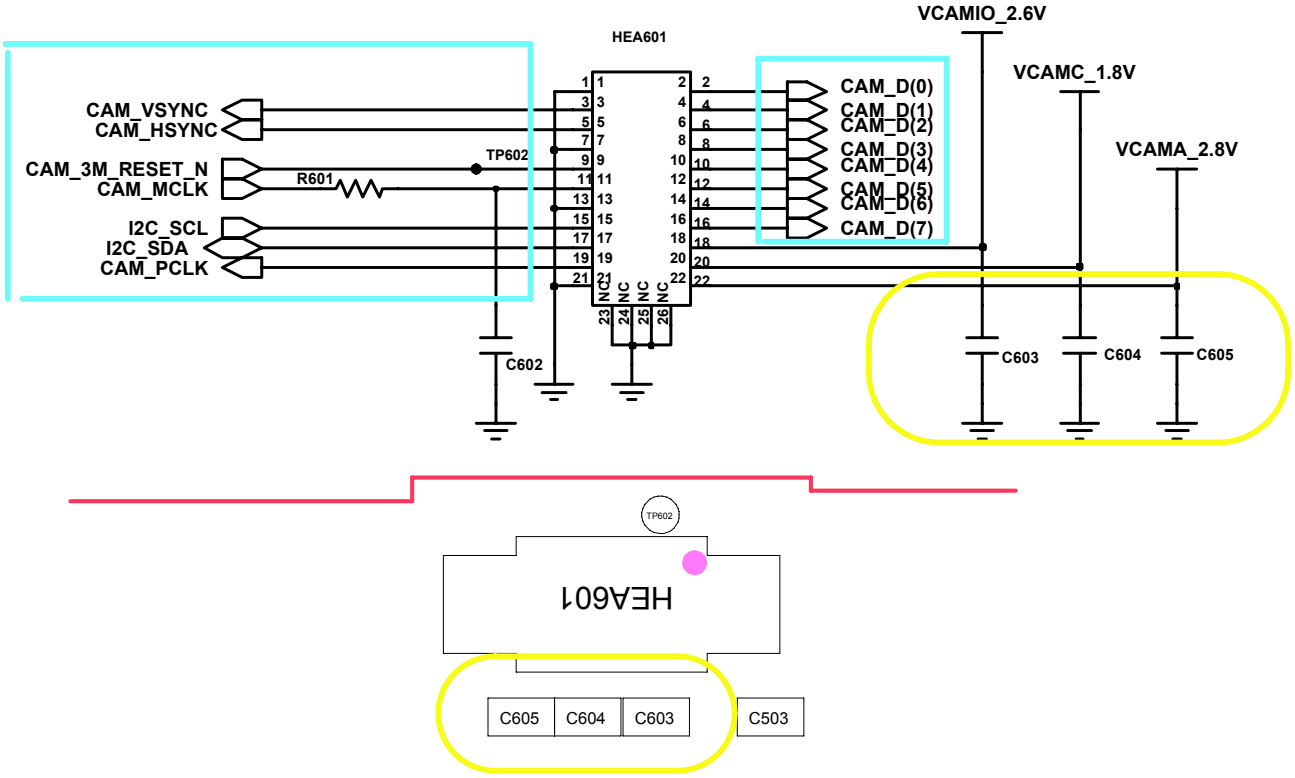







SAMSUNG Proprietary-Contents may change without notice
This Document can not be used without Samsung's authorization

## 8-4-1. GSM850 RX

**If you check the tx chain,

Check the not only RF Device but also resistor, inductor and capacitor.

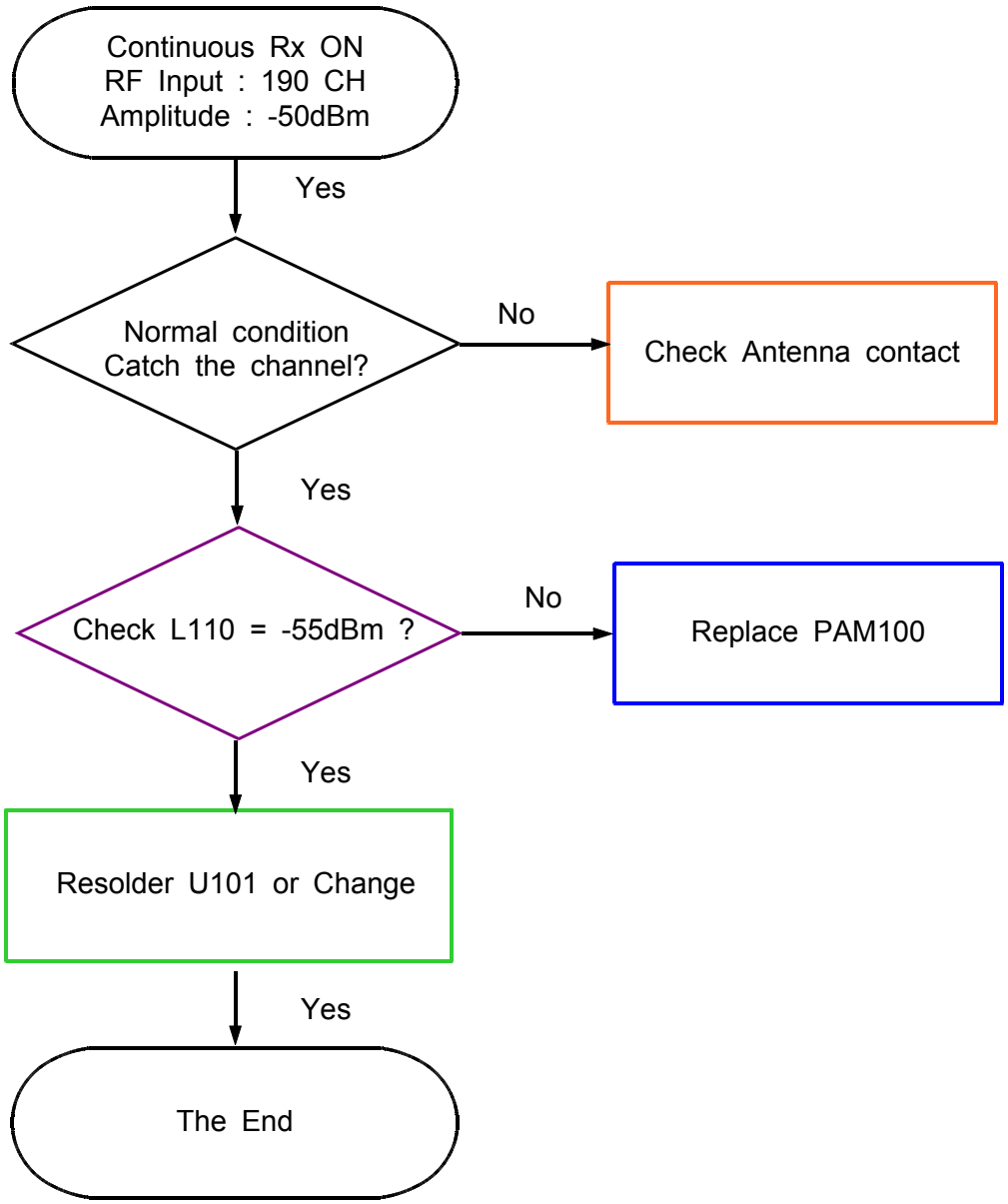




SAMSUNG Proprietary-Contents may change without notice
This Document can not be used without Samsung's authorization

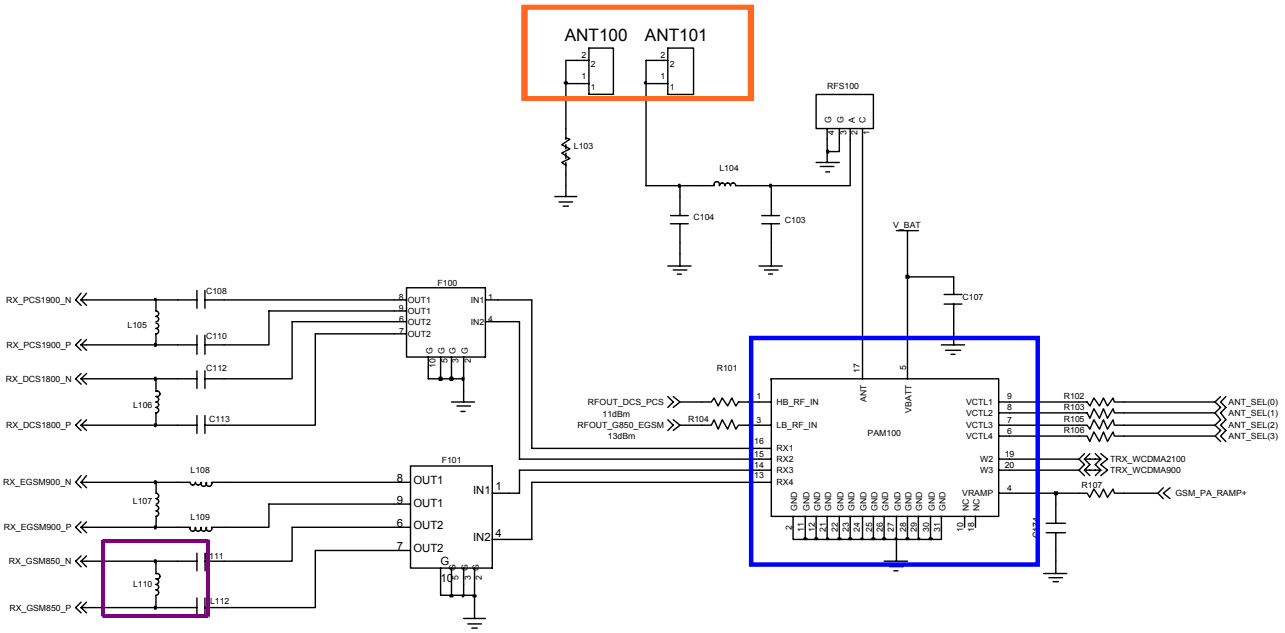


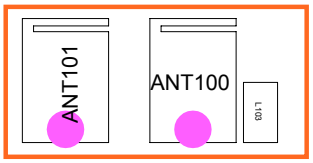


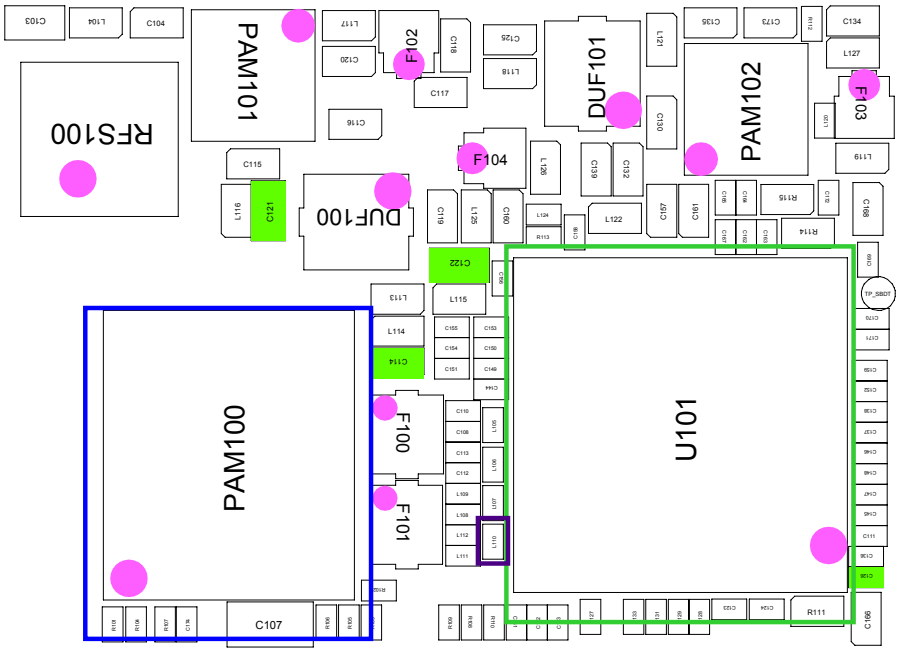




SAMSUNG Proprietary-Contents may change without notice
This Document can not be used without Samsung's authorization

## 8-4-2. GSM900 RX

**If you check the tx chain,
Check the not only RF Device but also resistor, inductor and capacitor.

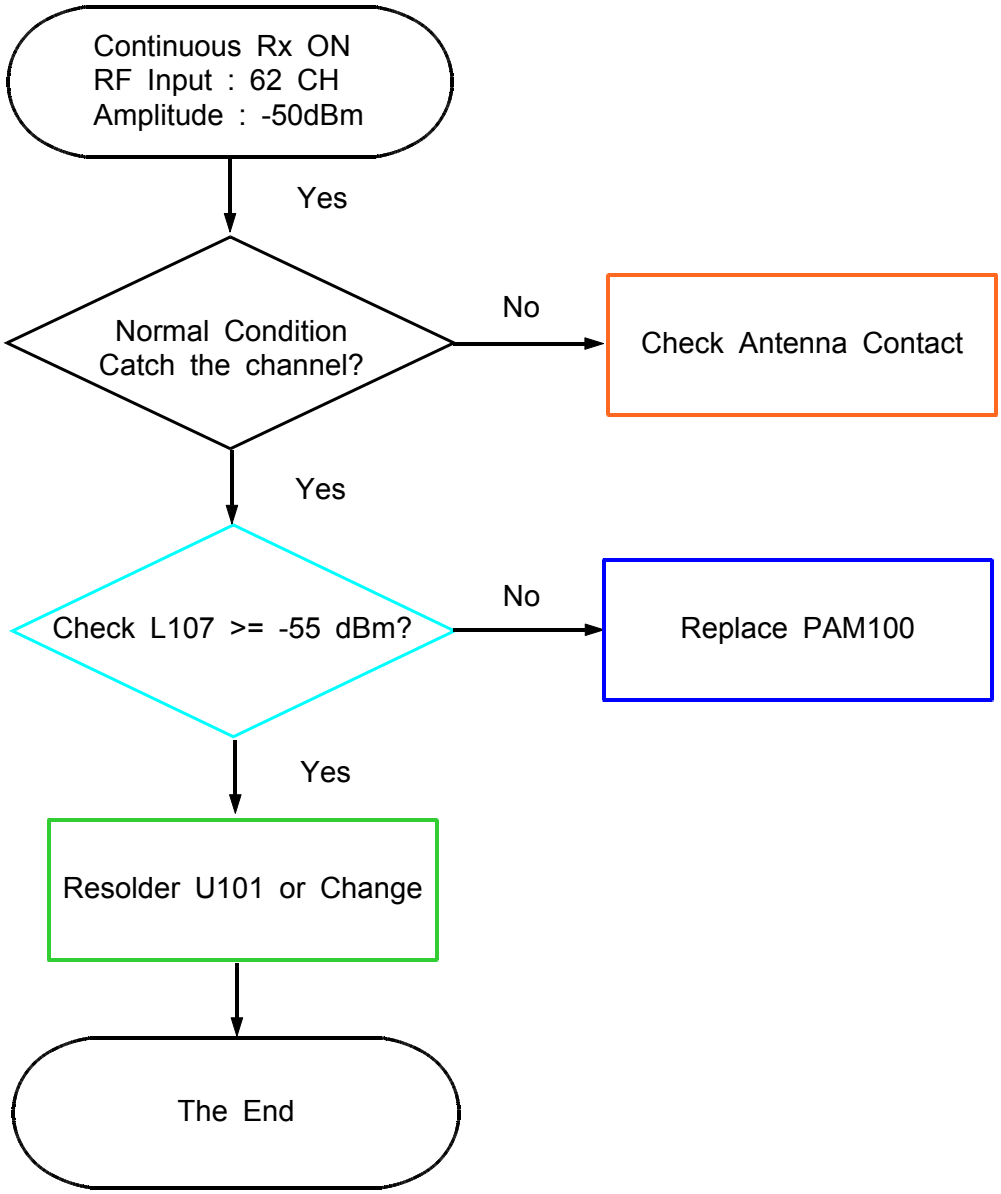




SAMSUNG Proprietary-Contents may change without notice
This Document can not be used without Samsung's authorization

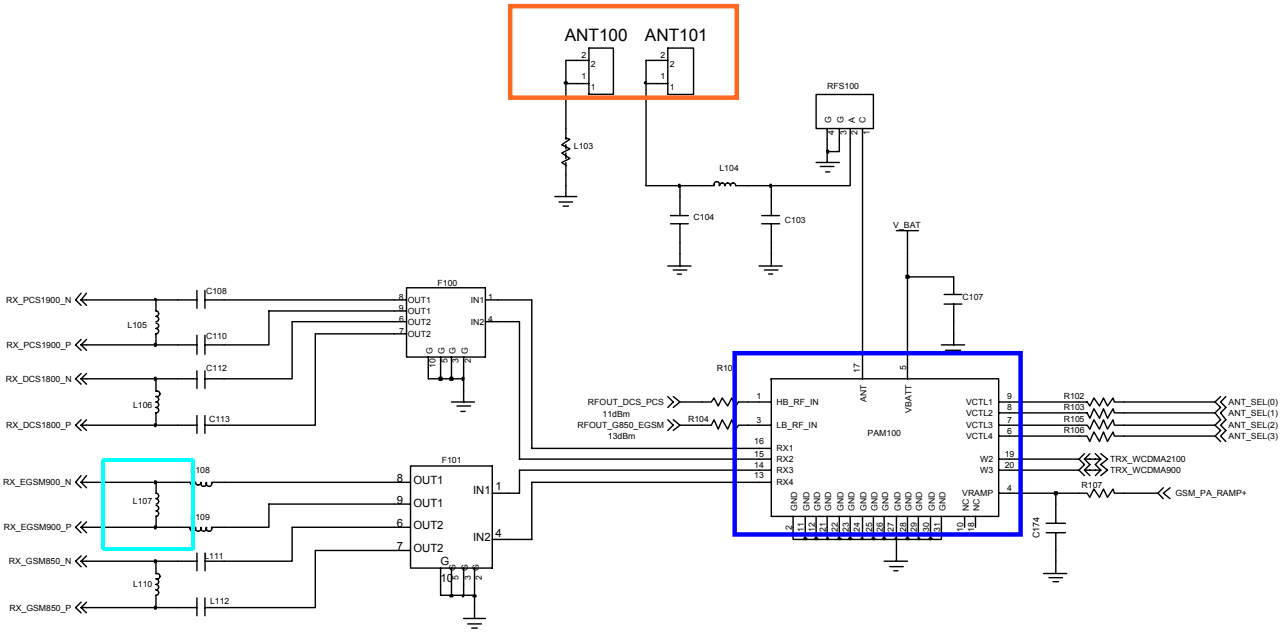


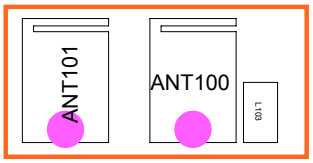


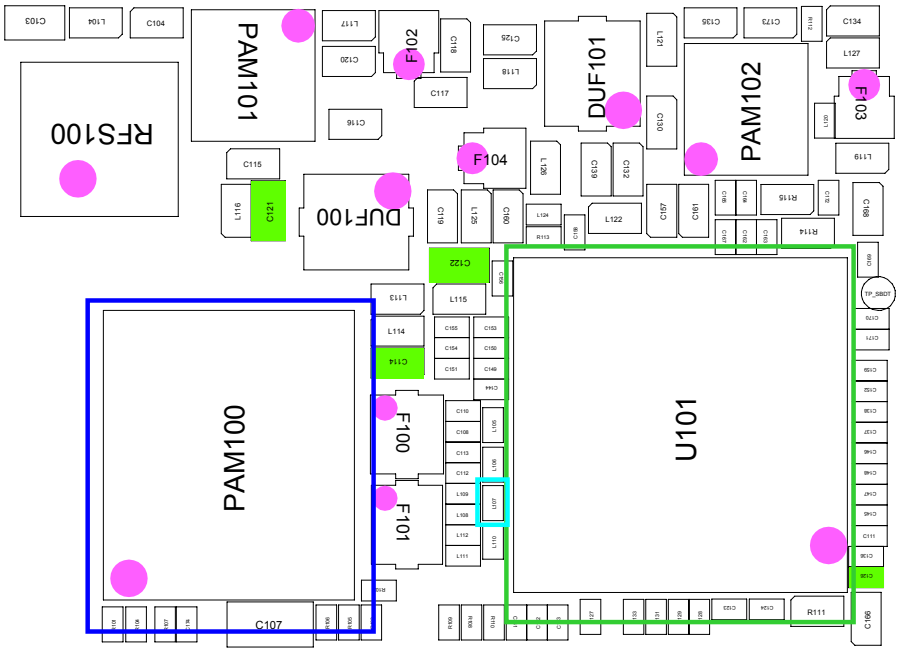




SAMSUNG Proprietary-Contents may change without notice
This Document can not be used without Samsung's authorization

## 8-4-3. DCS/PCS RX

**If you check the tx chain,
Check the not only RF Device but also resistor, inductor and capacitor.

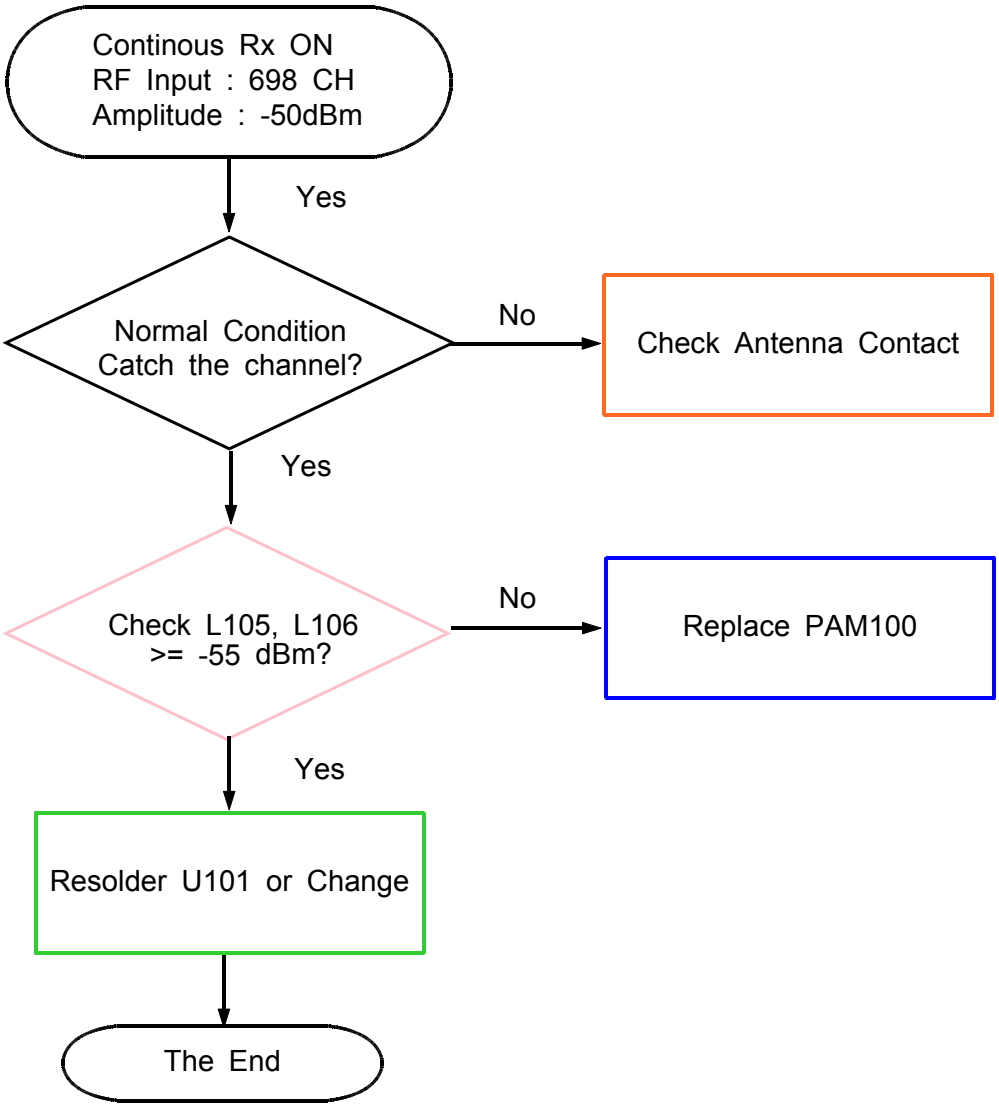




SAMSUNG Proprietary-Contents may change without notice
This Document can not be used without Samsung's authorization

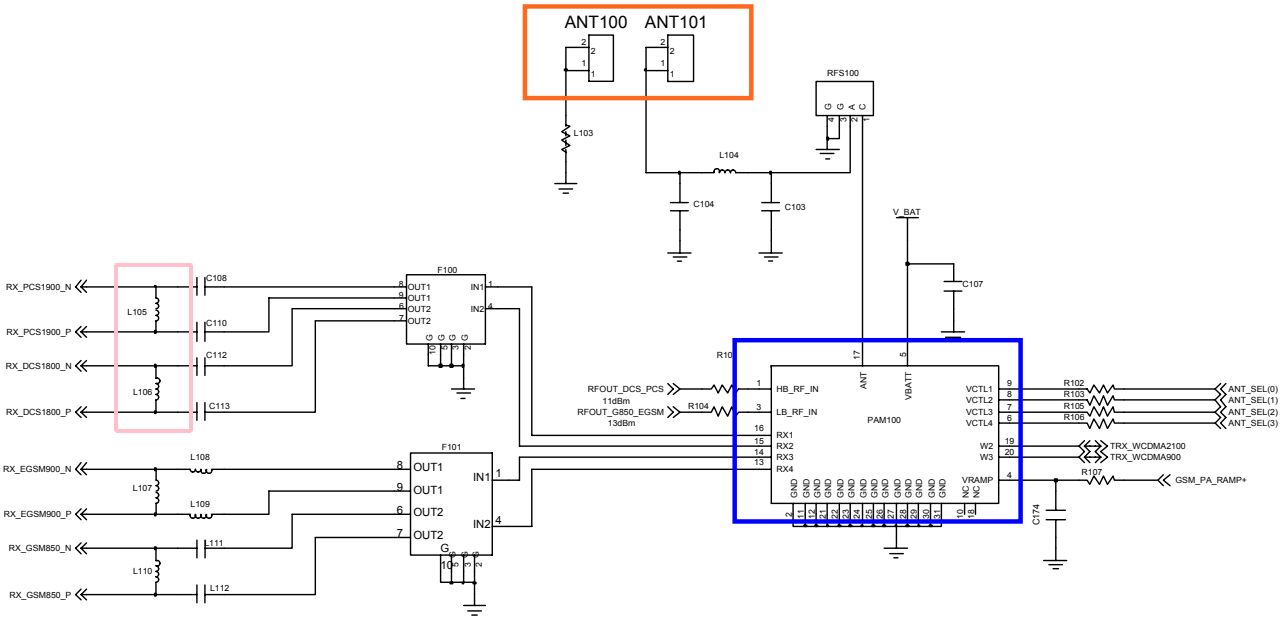


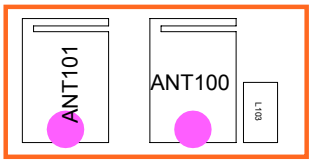


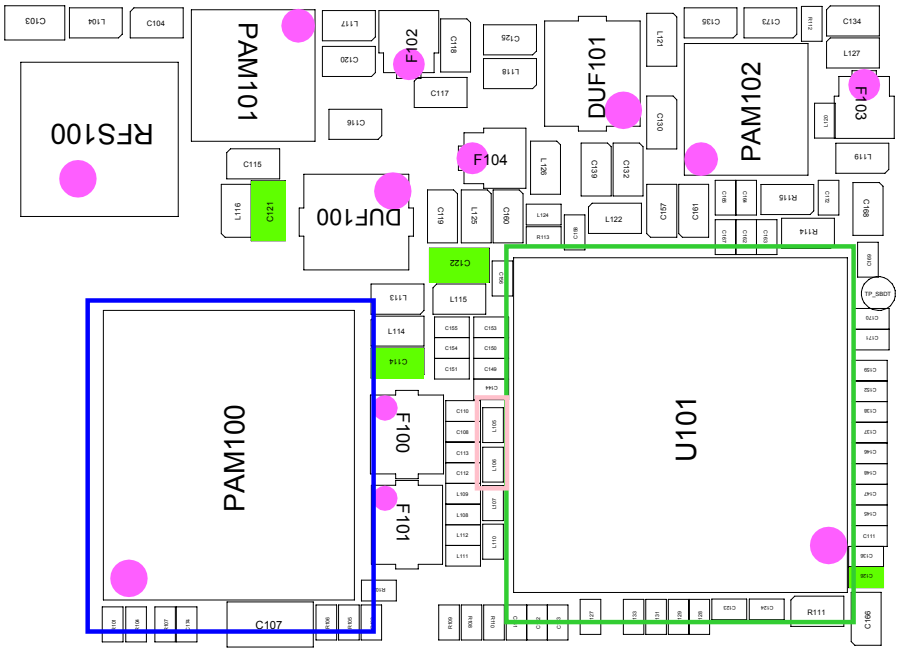




SAMSUNG Proprietary-Contents may change without notice
This Document can not be used without Samsung's authorization

## 8-4-4. WCDMA Band1 RX

**If you check the tx chain,
Check the not only RF Device but also resistor, inductor and capacitor.

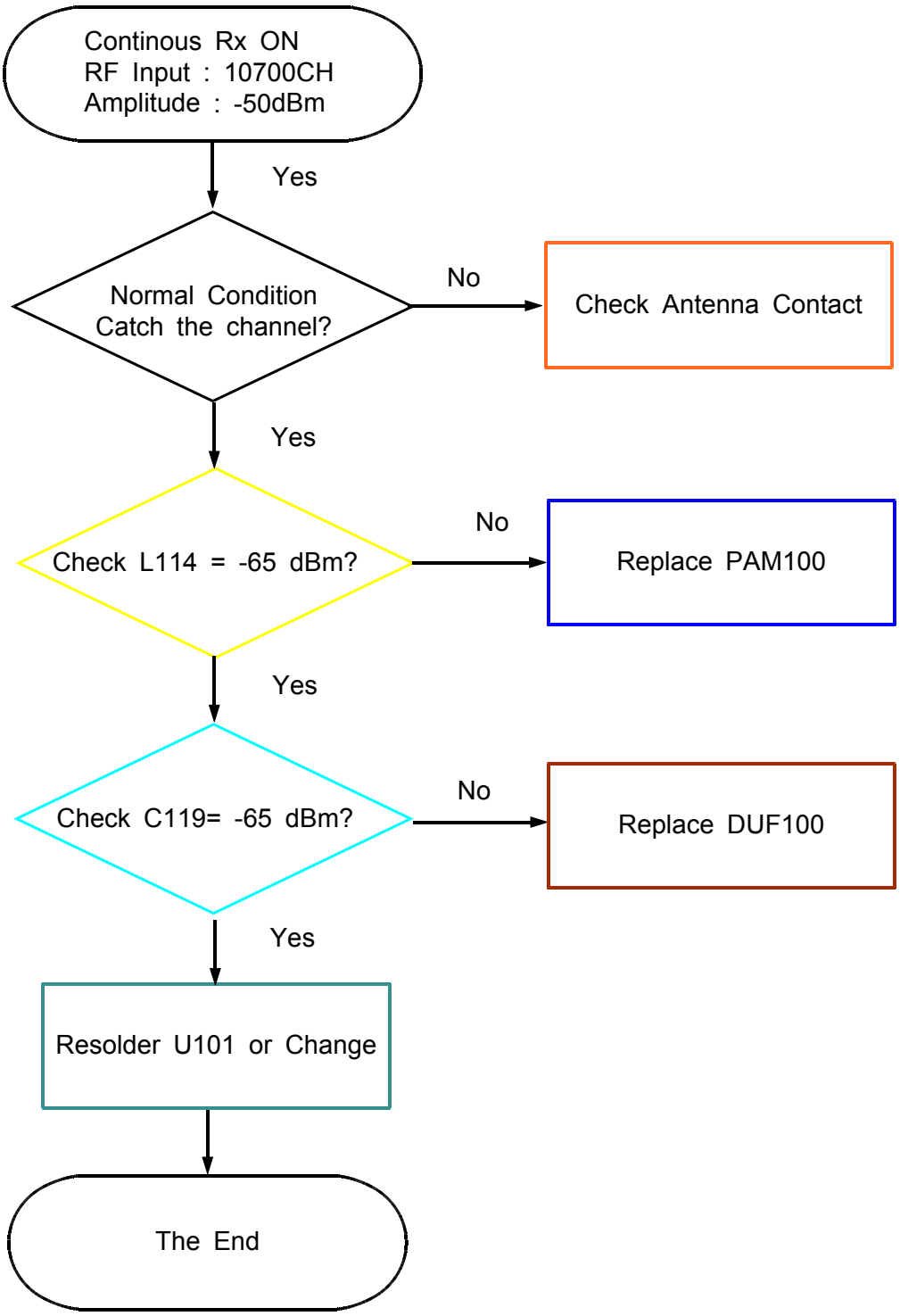




SAMSUNG Proprietary-Contents may change without notice
This Document can not be used without Samsung's authorization

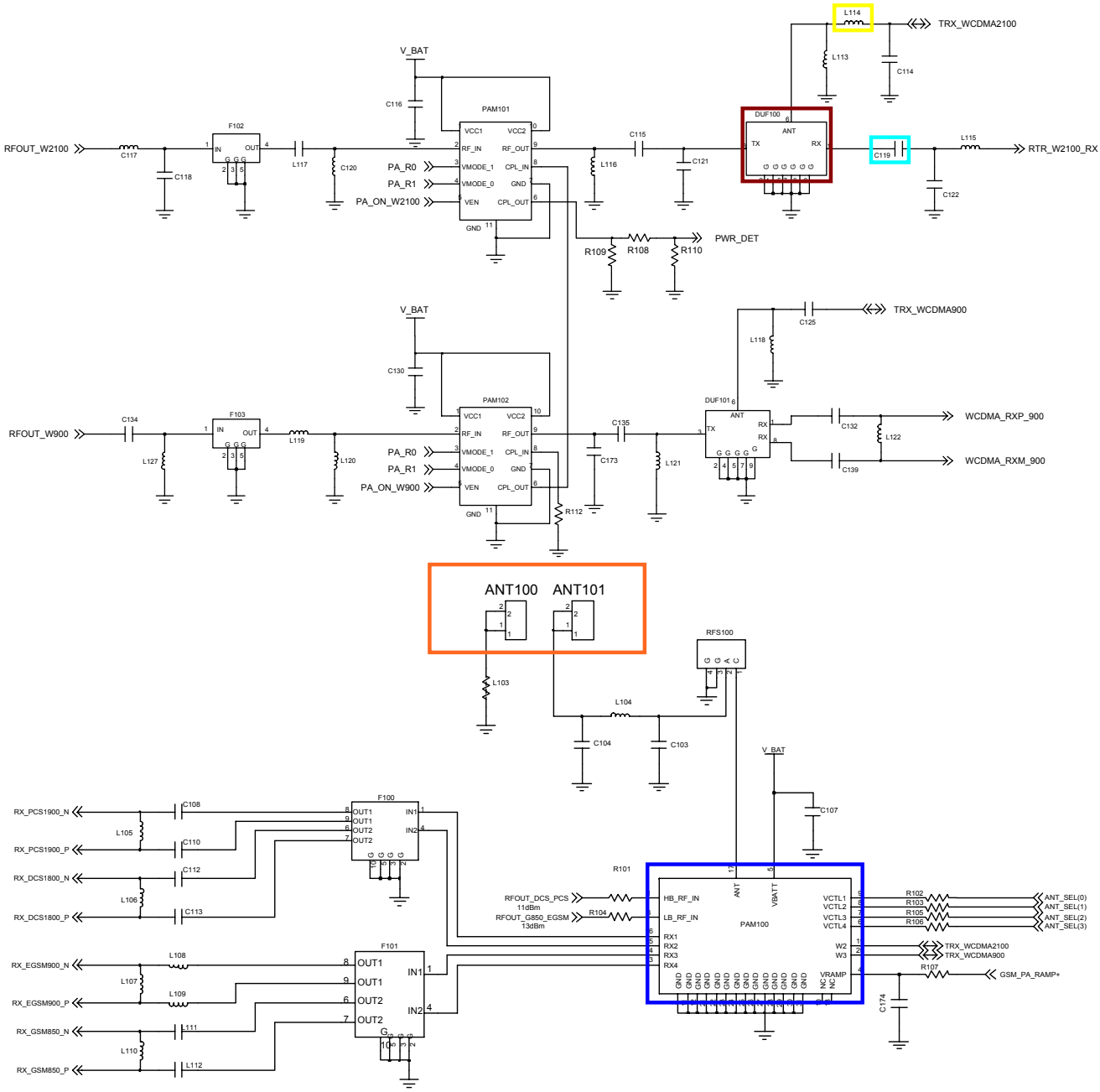




SAMSUNG Proprietary-Contents may change without notice
This Document can not be used without Samsung's authorization

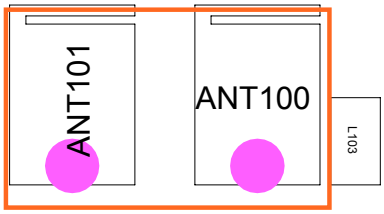


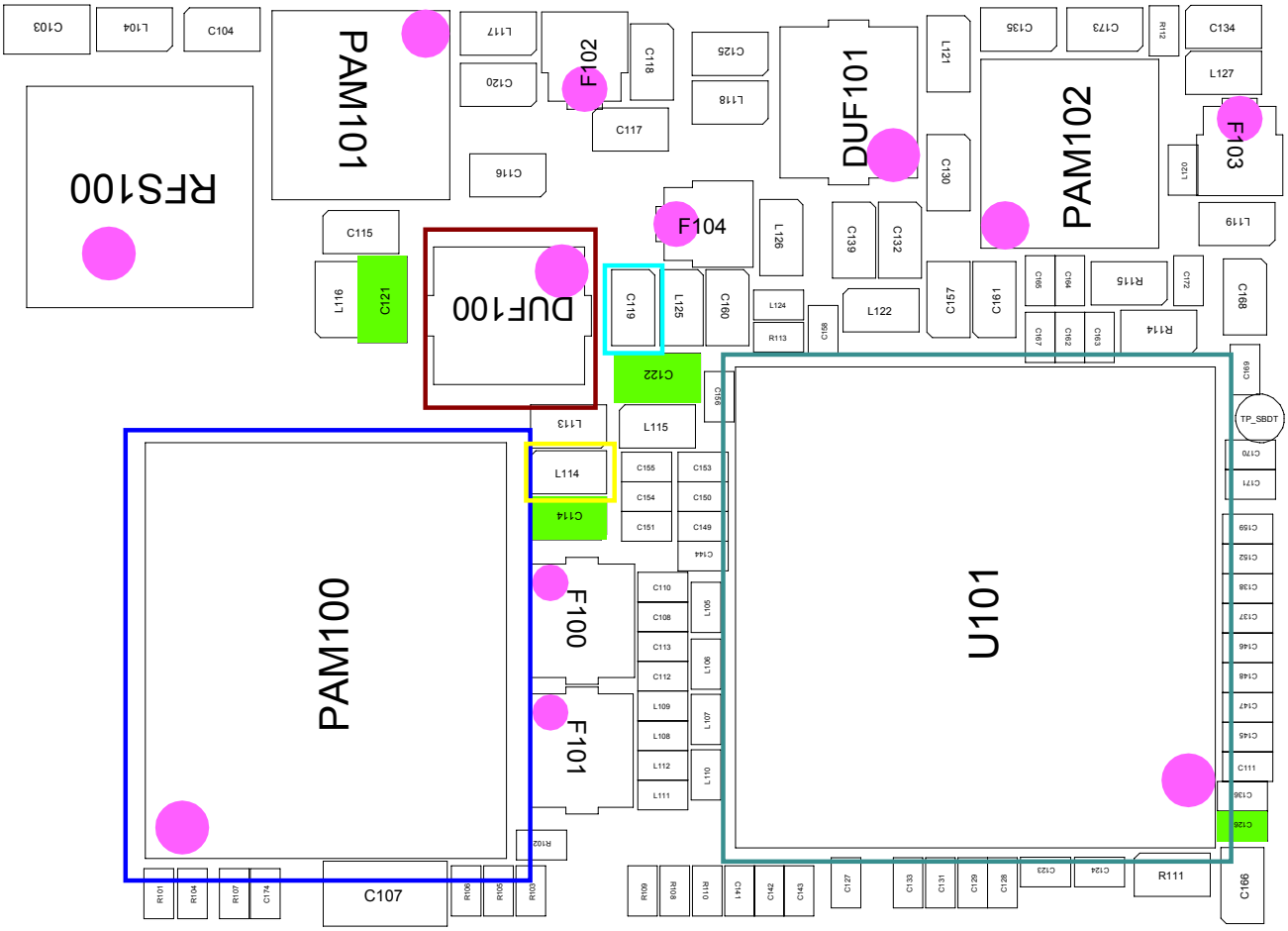




SAMSUNG Proprietary-Contents may change without notice
This Document can not be used without Samsung's authorization

## 8-4-5. WCDMA Band8 RX

**If you check the tx chain,
Check the not only RF Device but also resistor, inductor and capacitor.

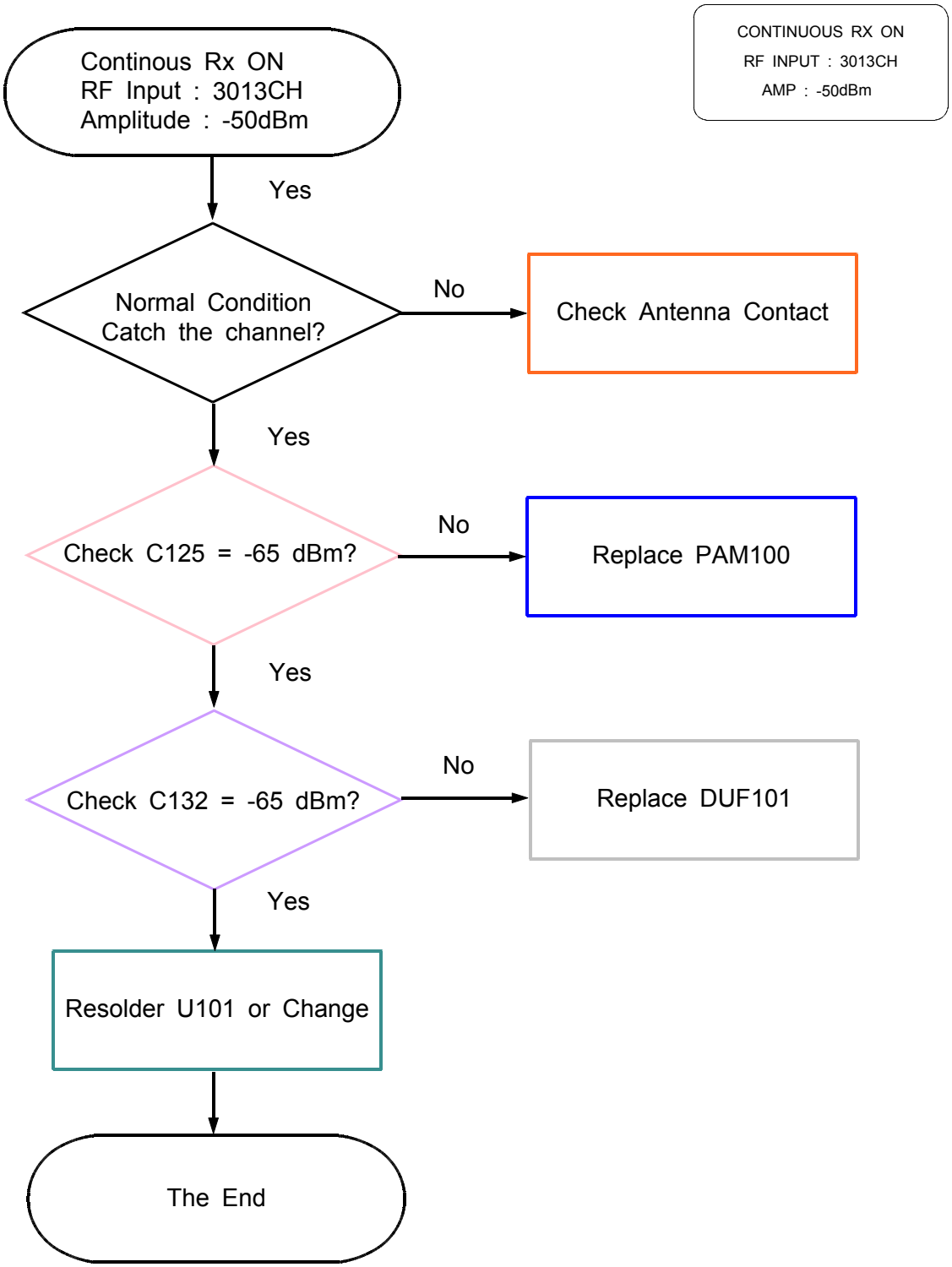




SAMSUNG Proprietary-Contents may change without notice
This Document can not be used without Samsung's authorization

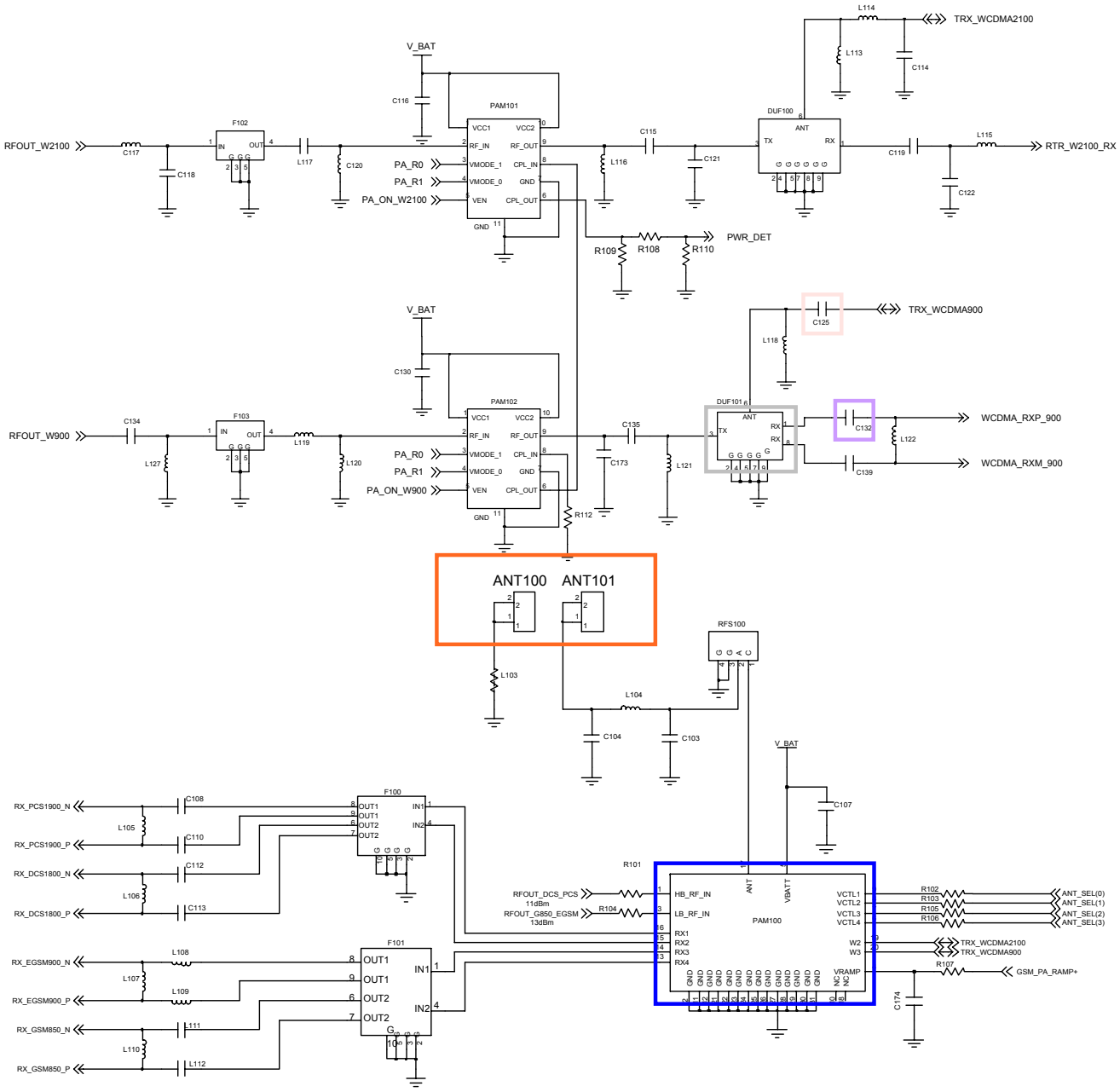




SAMSUNG Proprietary-Contents may change without notice
This Document can not be used without Samsung's authorization

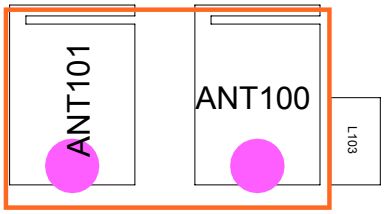


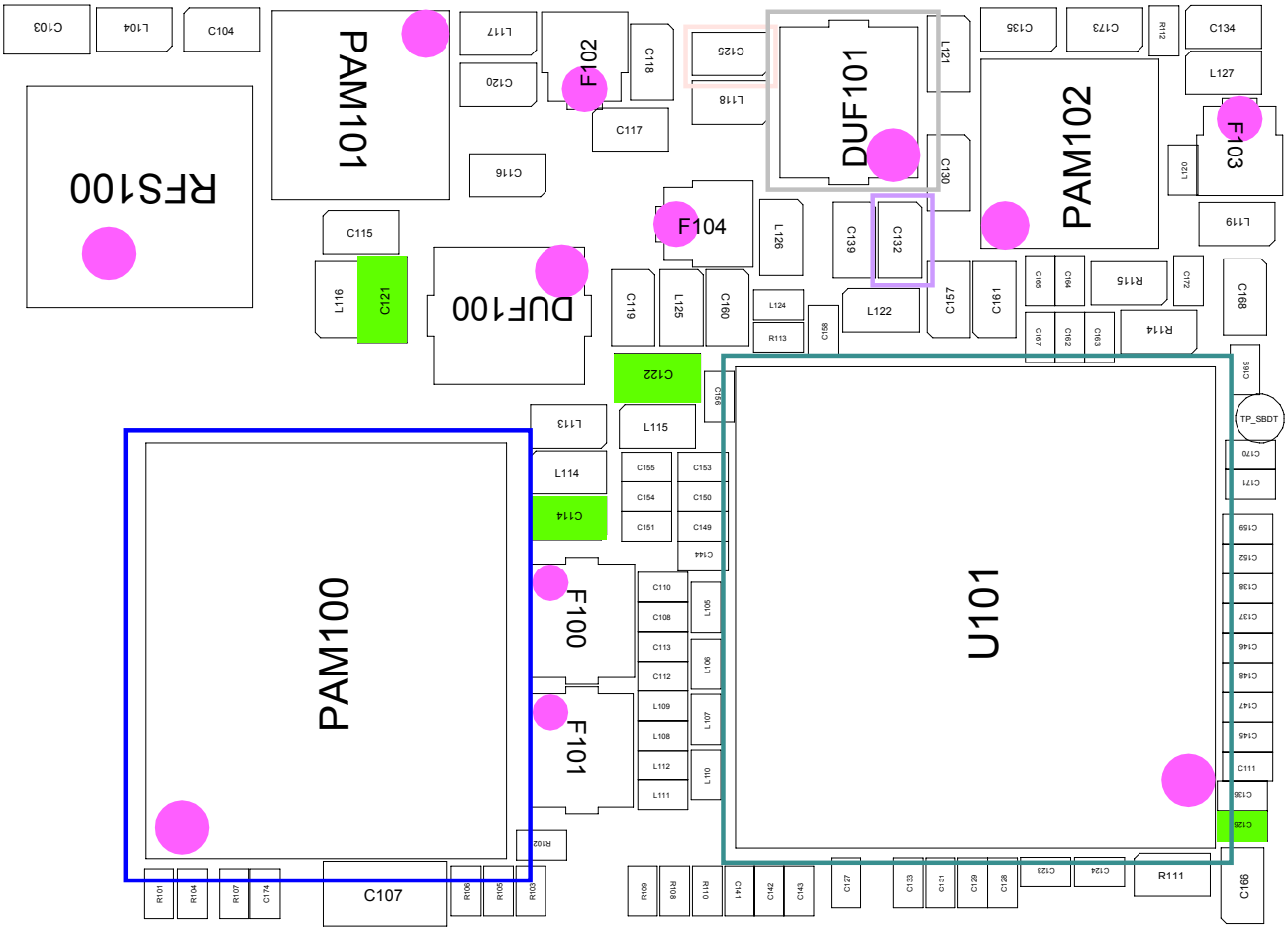




SAMSUNG Proprietary-Contents may change without notice
This Document can not be used without Samsung's authorization

## 8-4-6. GSM850/900 TX

**If you check the tx chain,

Check the not only RF Device but also resistor, inductor and capacitor.

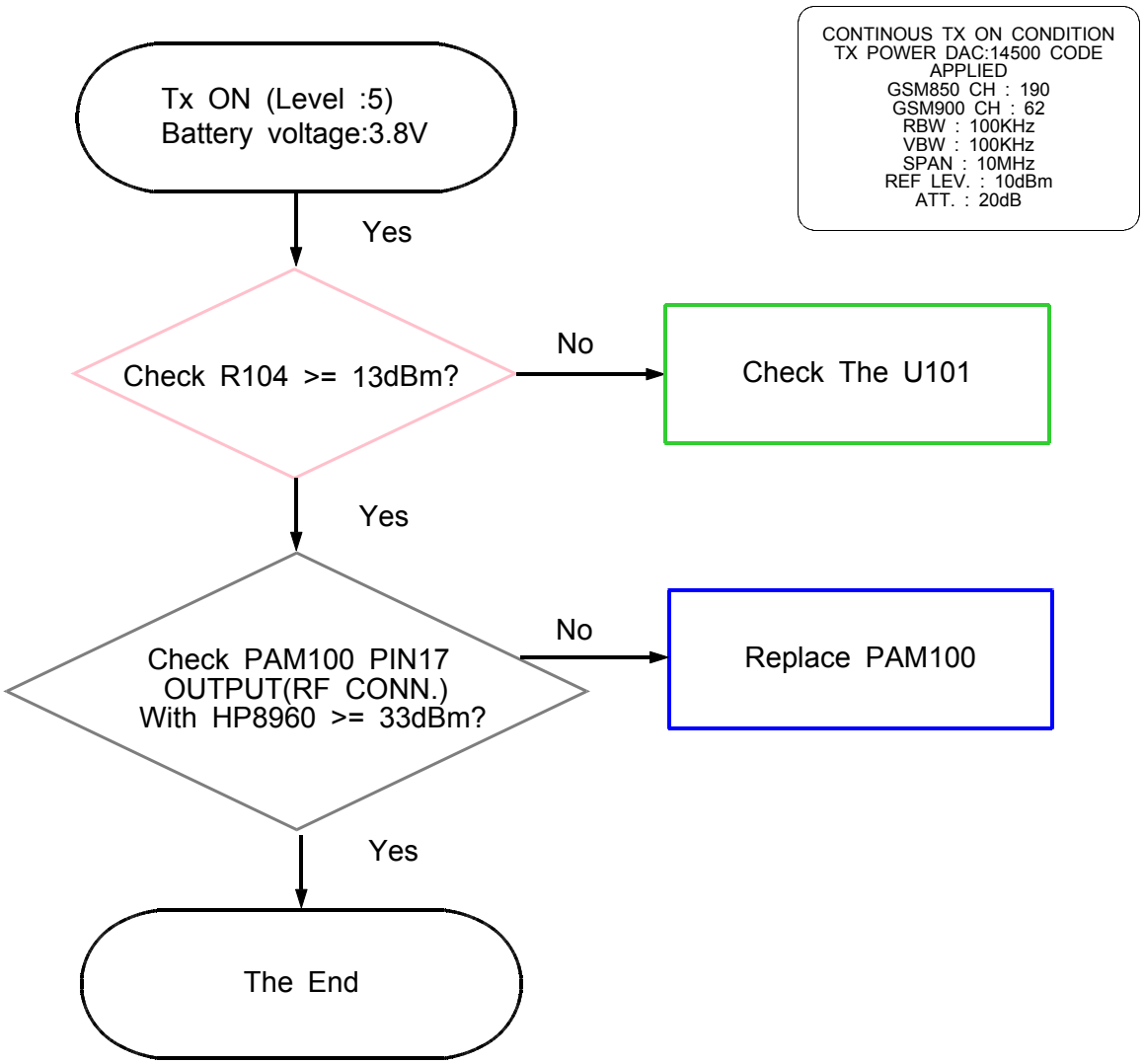




SAMSUNG Proprietary-Contents may change without notice
This Document can not be used without Samsung's authorization

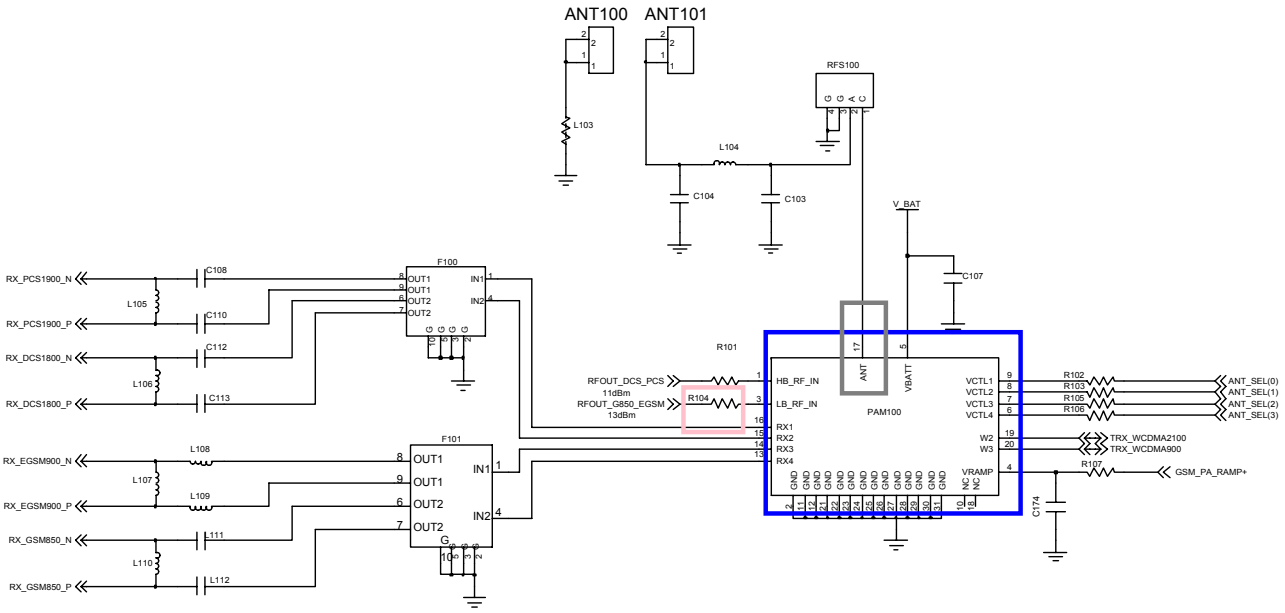


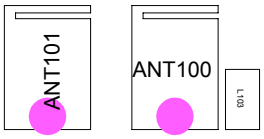


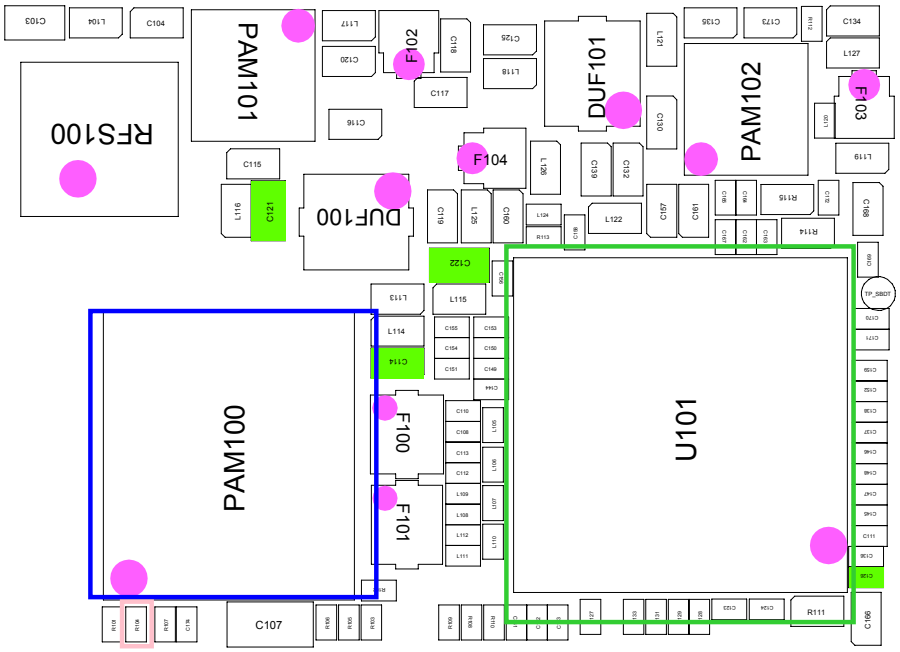




SAMSUNG Proprietary-Contents may change without notice
This Document can not be used without Samsung's authorization

## 8-4-7. DCS/PCS TX

**If you check the tx chain,
Check the not only RF Device but also resistor, inductor and capacitor.

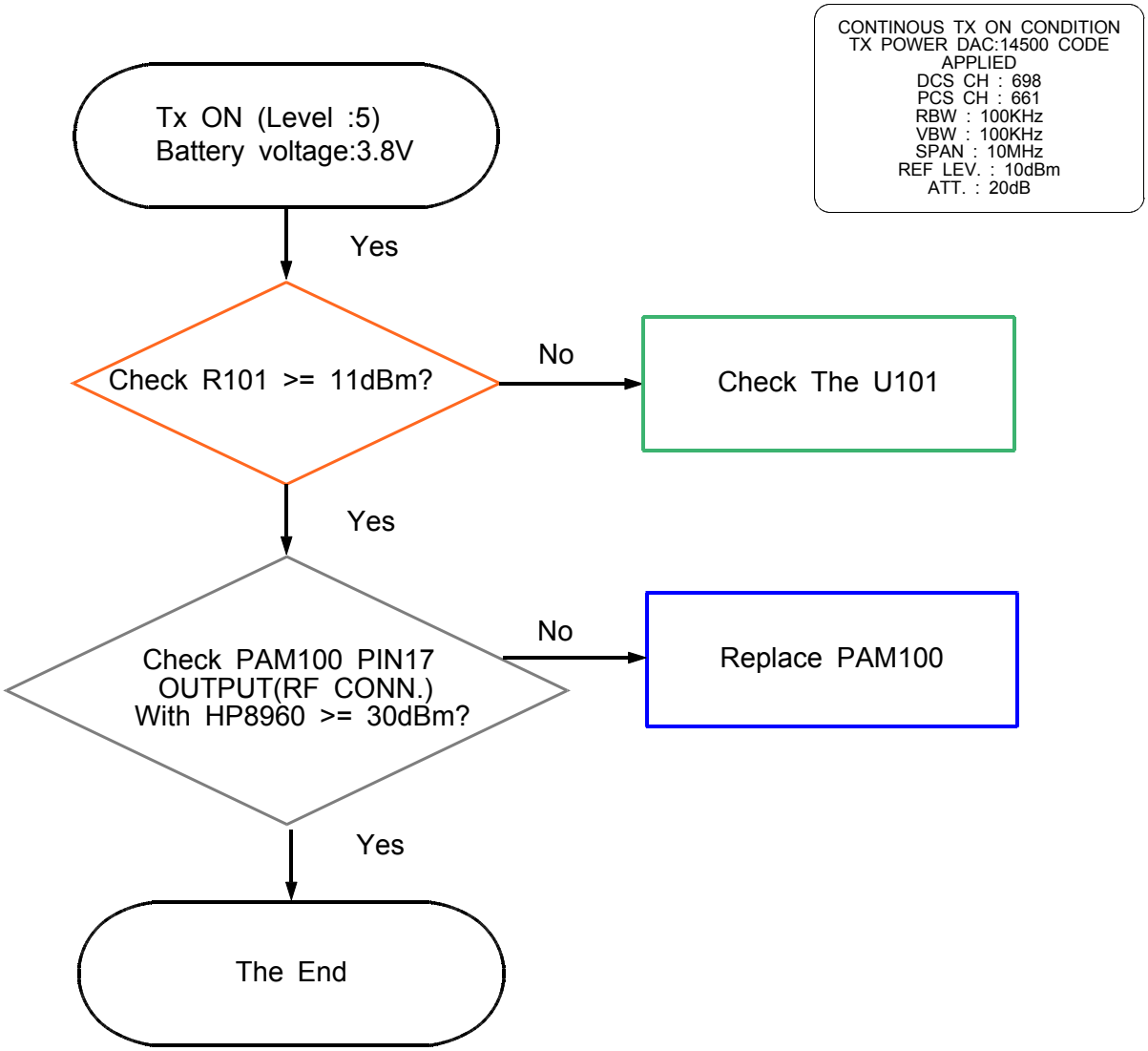




SAMSUNG Proprietary-Contents may change without notice
This Document can not be used without Samsung's authorization

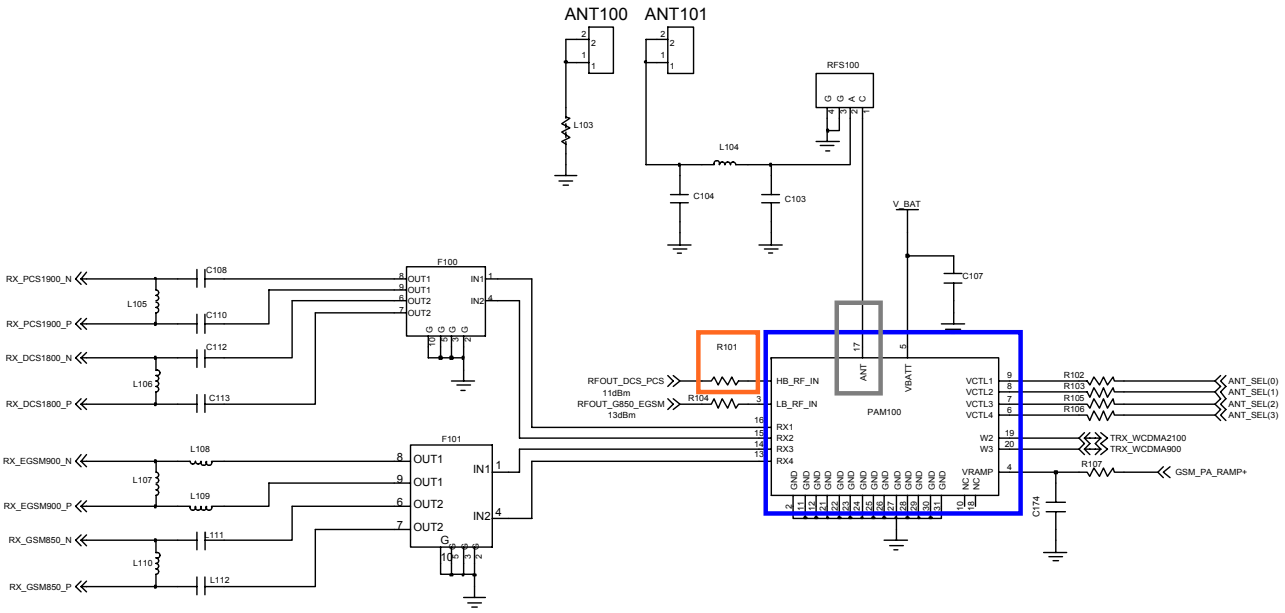


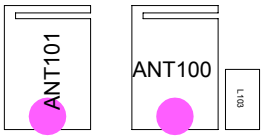


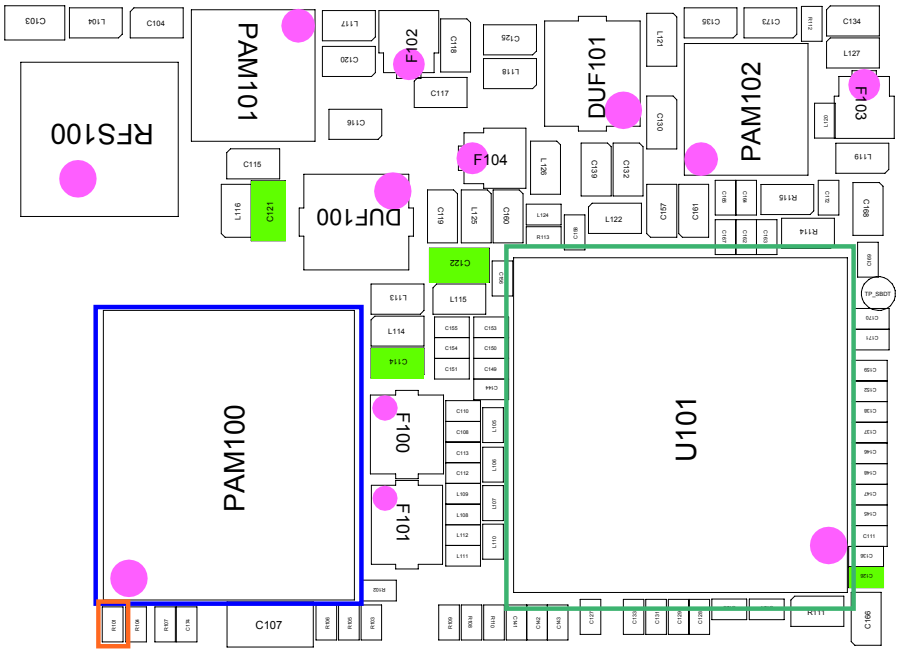




SAMSUNG Proprietary-Contents may change without notice
This Document can not be used without Samsung's authorization

## 8-4-8. WCDMA Band1 TX

**If you check the tx chain,
Check the not only RF Device but also resistor, inductor and capacitor.

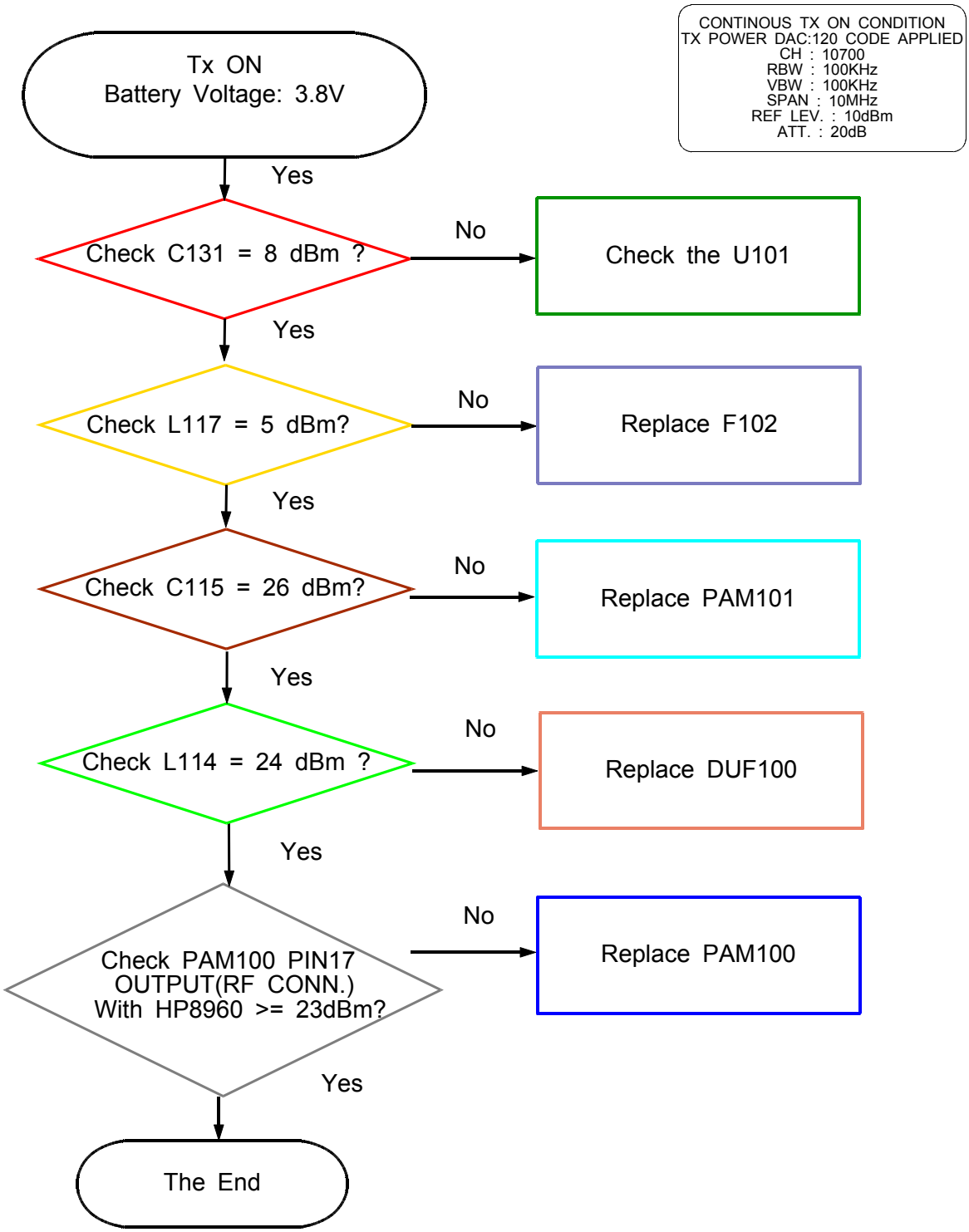




SAMSUNG Proprietary-Contents may change without notice
This Document can not be used without Samsung's authorization

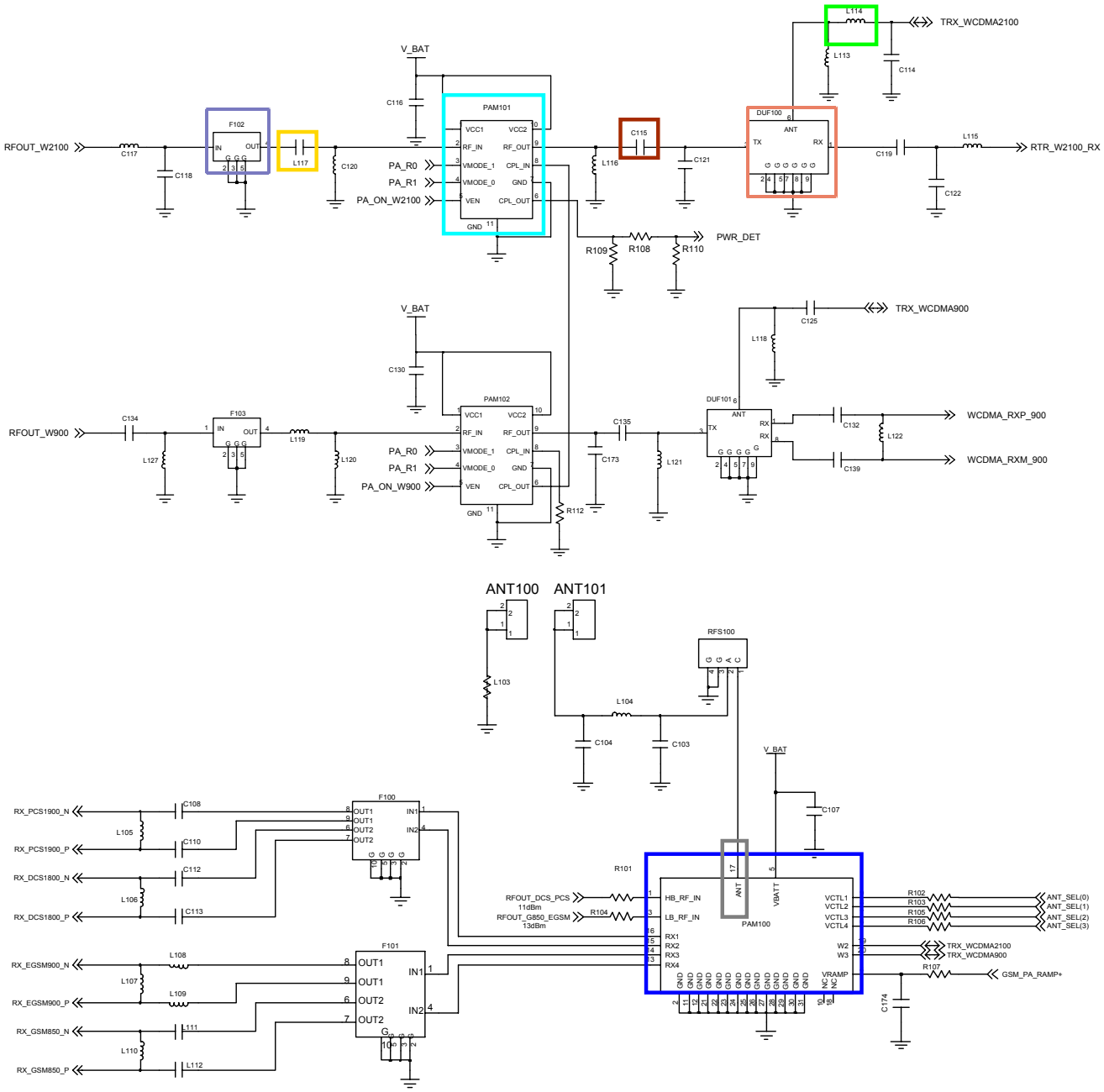




SAMSUNG Proprietary-Contents may change without notice
This Document can not be used without Samsung's authorization

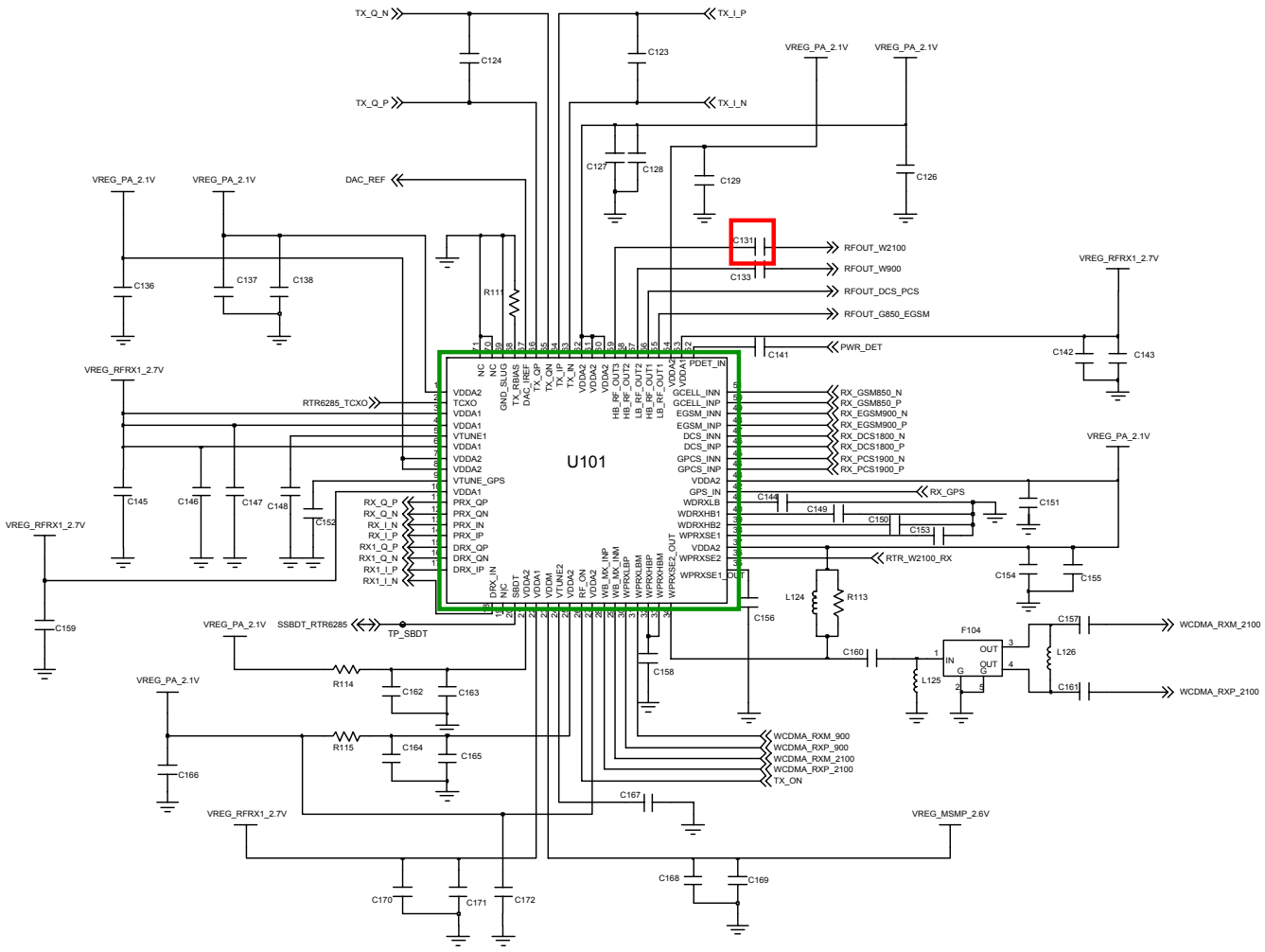




SAMSUNG Proprietary-Contents may change without notice
This Document can not be used without Samsung's authorization

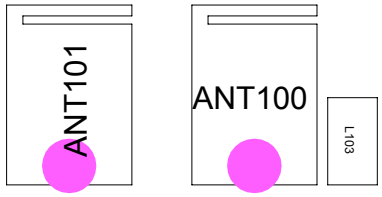


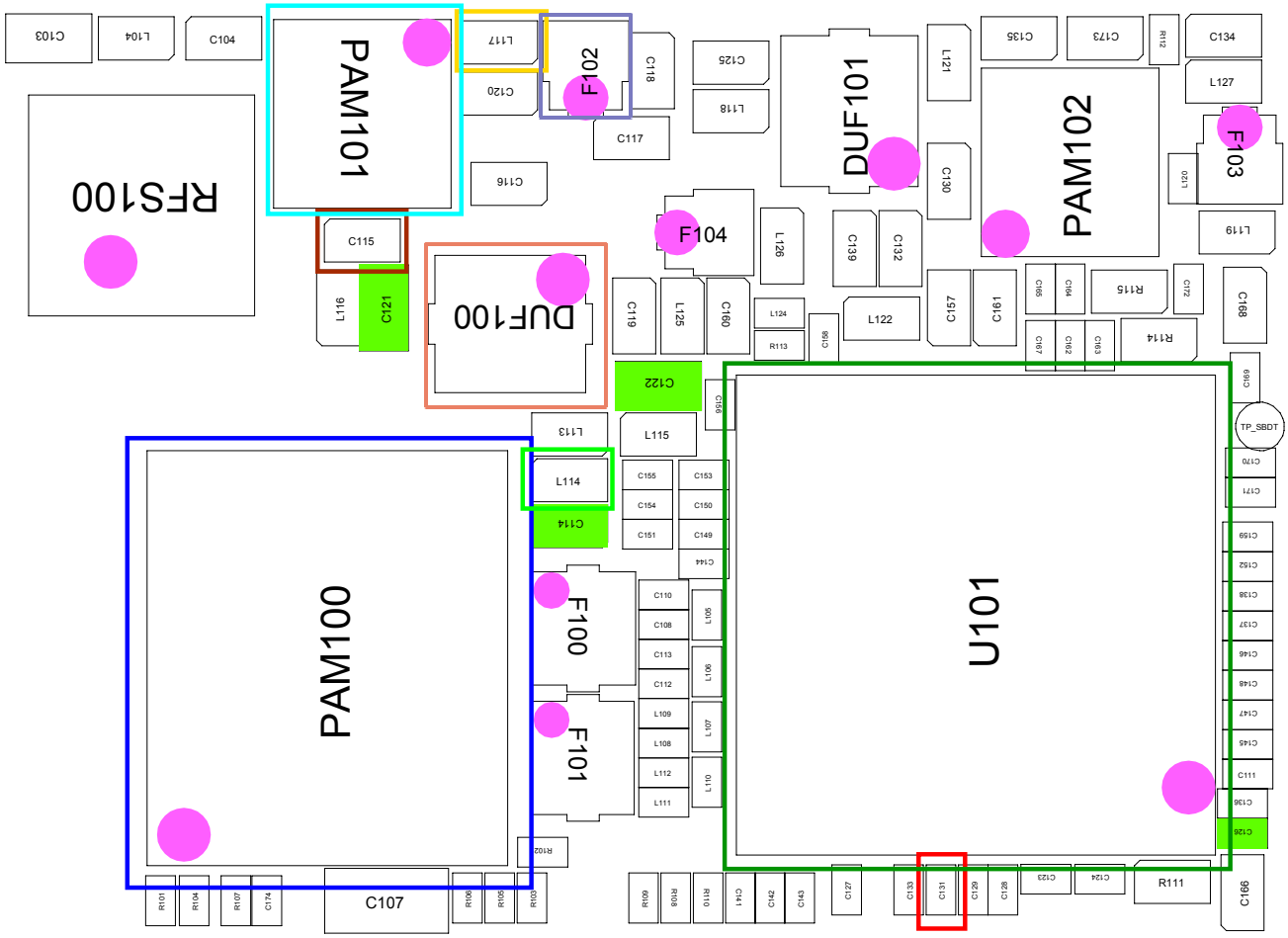




SAMSUNG Proprietary-Contents may change without notice
This Document can not be used without Samsung's authorization

## 8-4-9. WCDMA Band8 TX

**If you check the tx chain,
Check the not only RF Device but also resistor, inductor and capacitor.

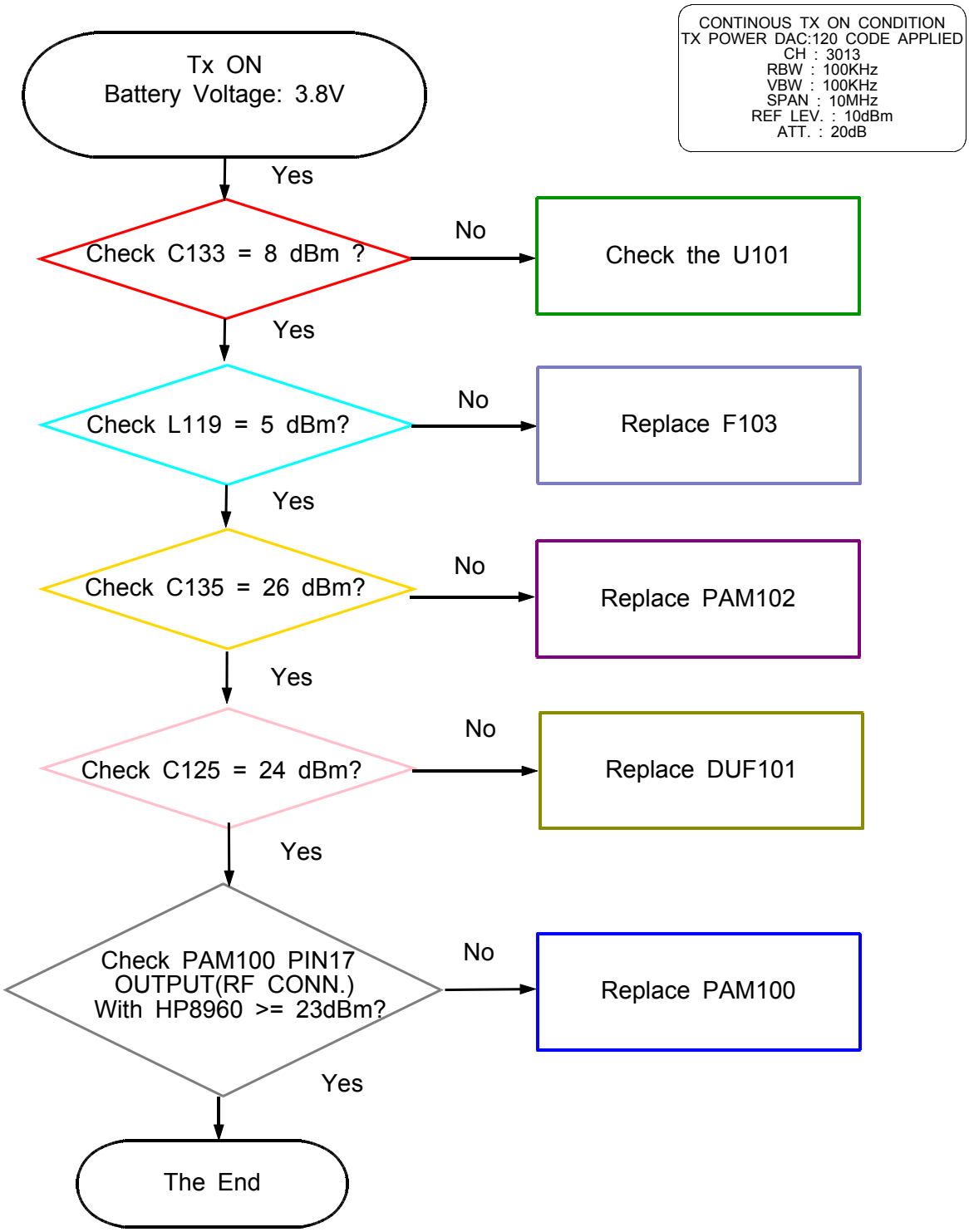




SAMSUNG Proprietary-Contents may change without notice
This Document can not be used without Samsung's authorization

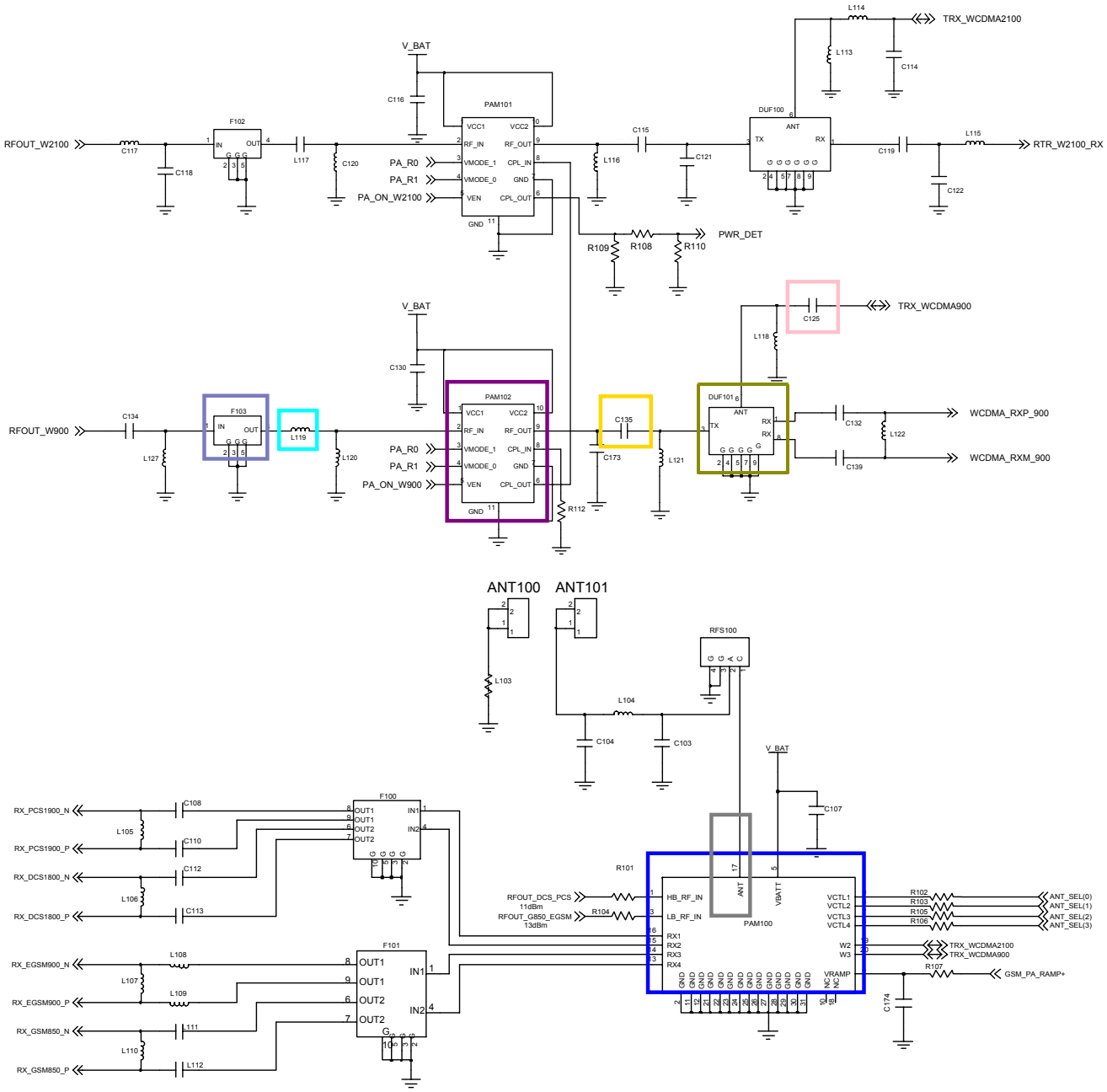




SAMSUNG Proprietary-Contents may change without notice
This Document can not be used without Samsung's authorization

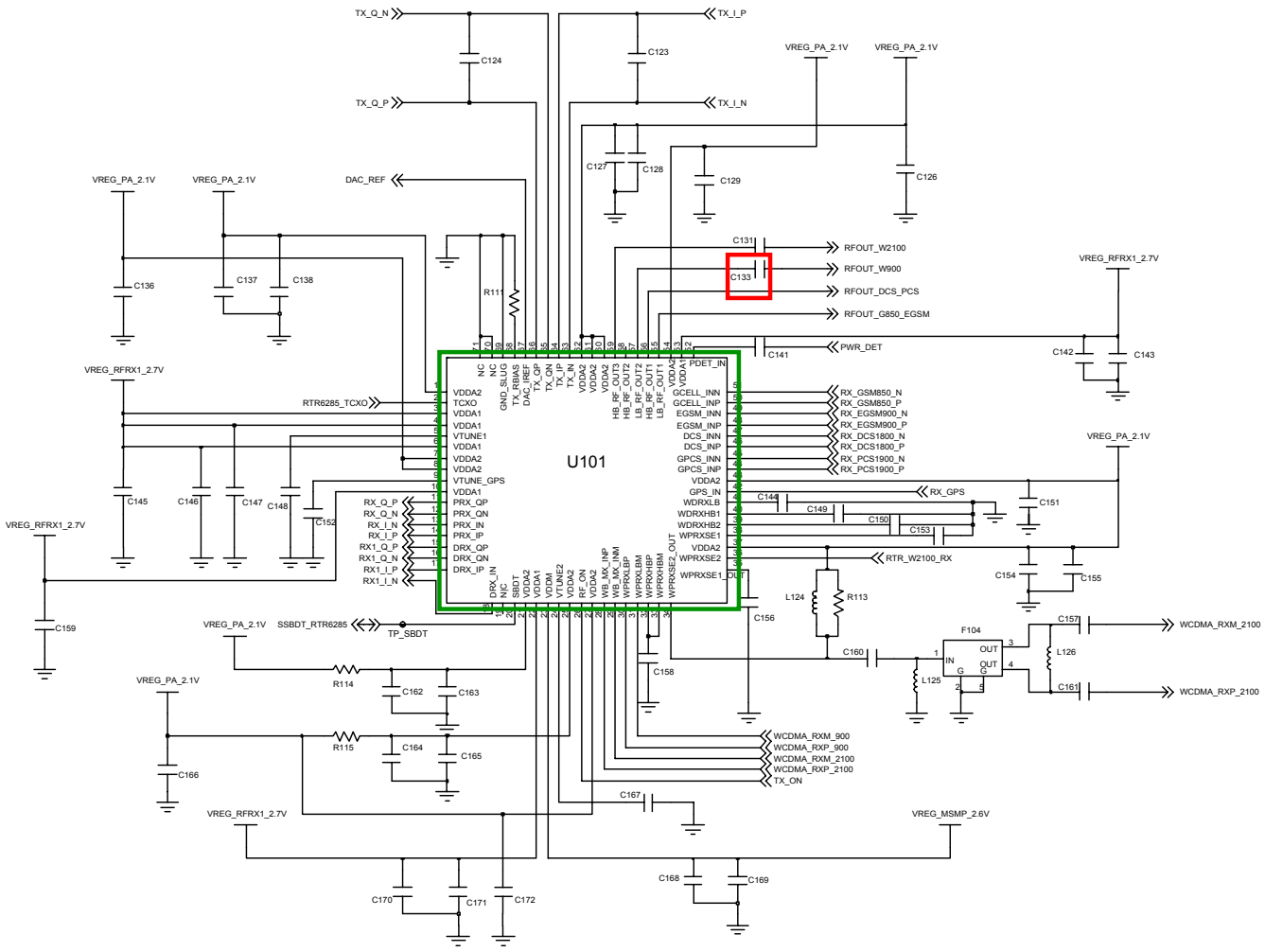




SAMSUNG Proprietary-Contents may change without notice
This Document can not be used without Samsung's authorization

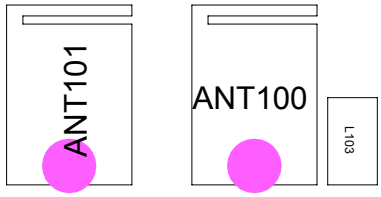


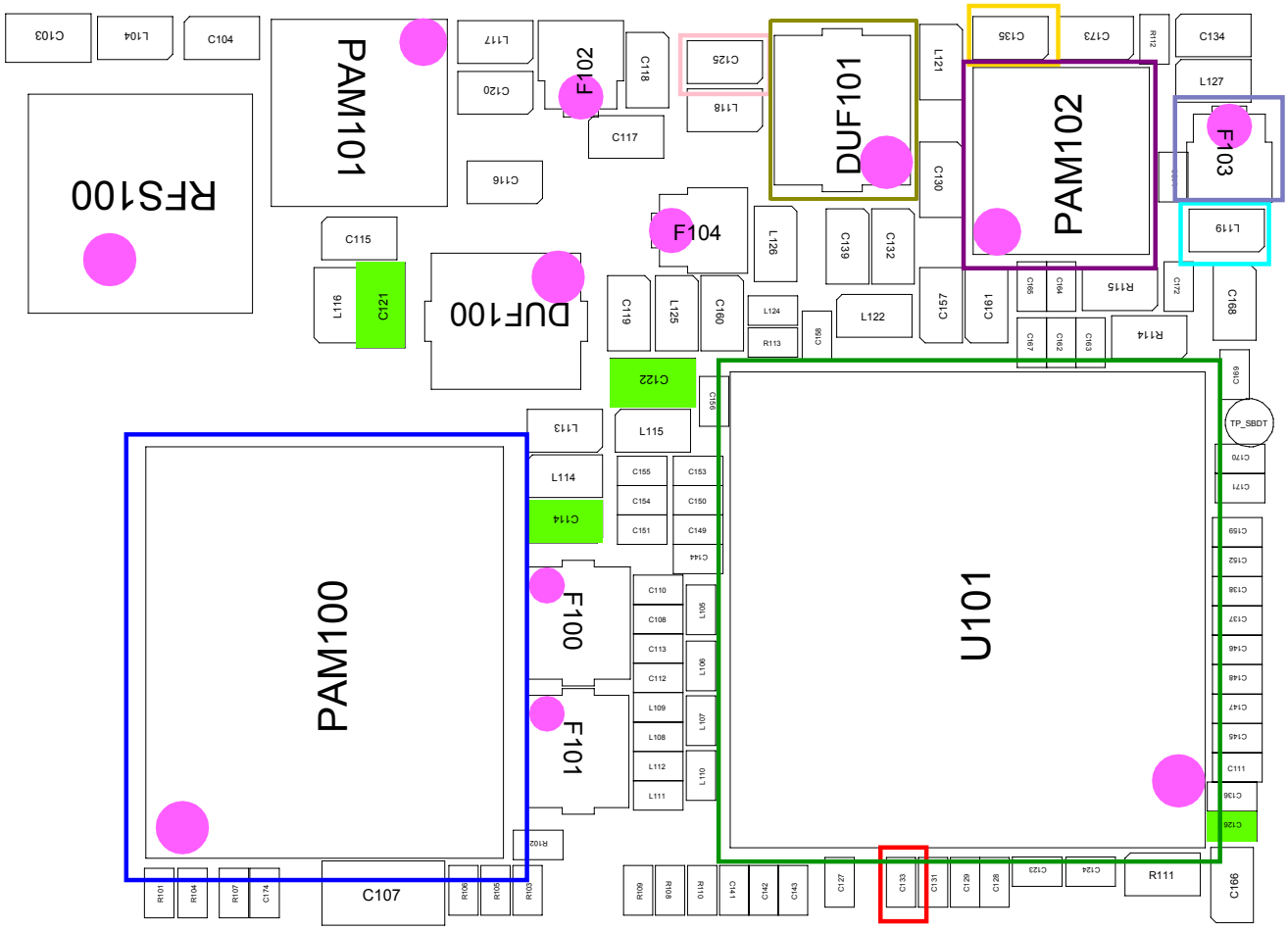




SAMSUNG Proprietary-Contents may change without notice
This Document can not be used without Samsung's authorization

## 8-4-10. BLUETOOTH

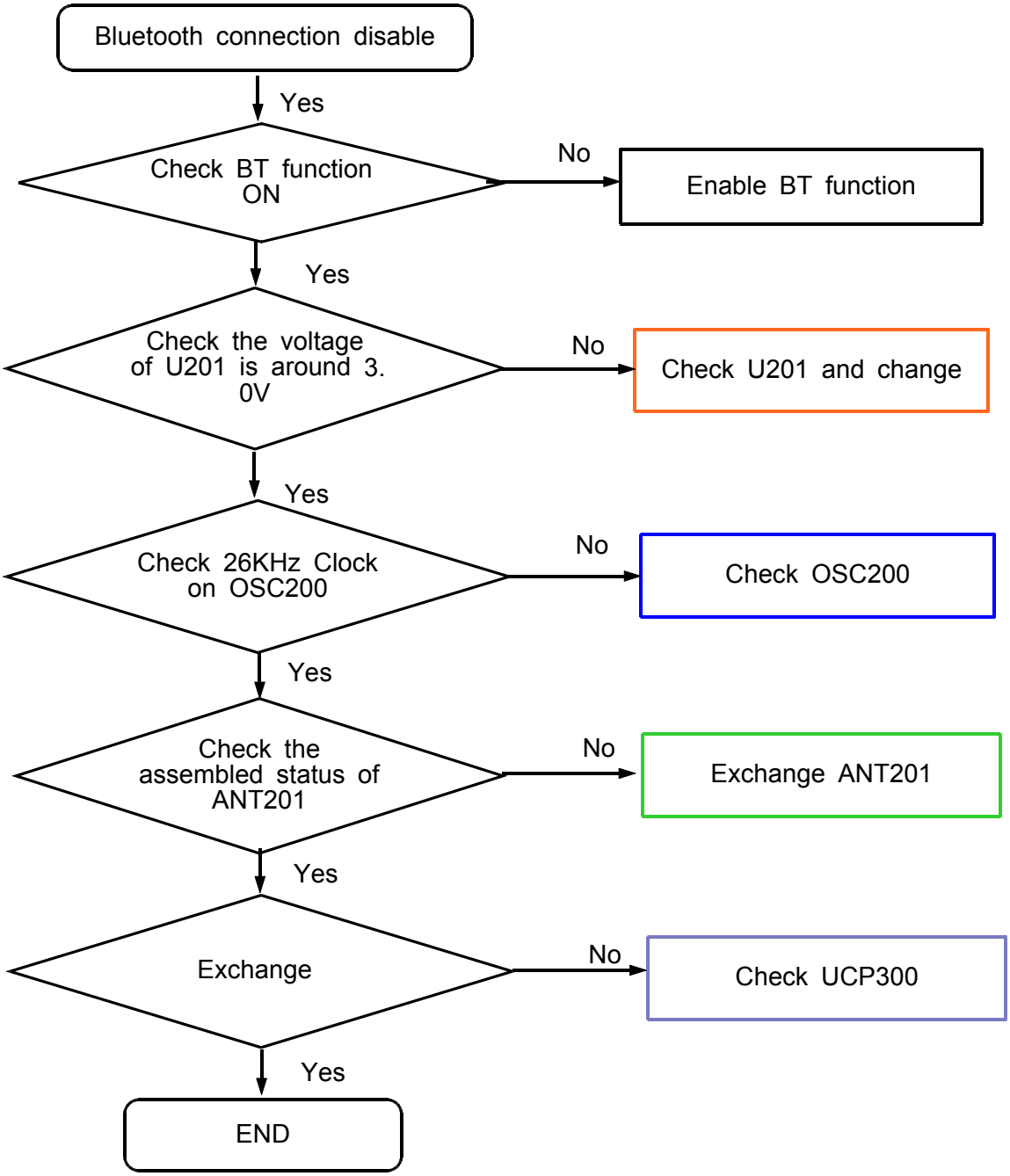




SAMSUNG Proprietary-Contents may change without notice
This Document can not be used without Samsung's authorization

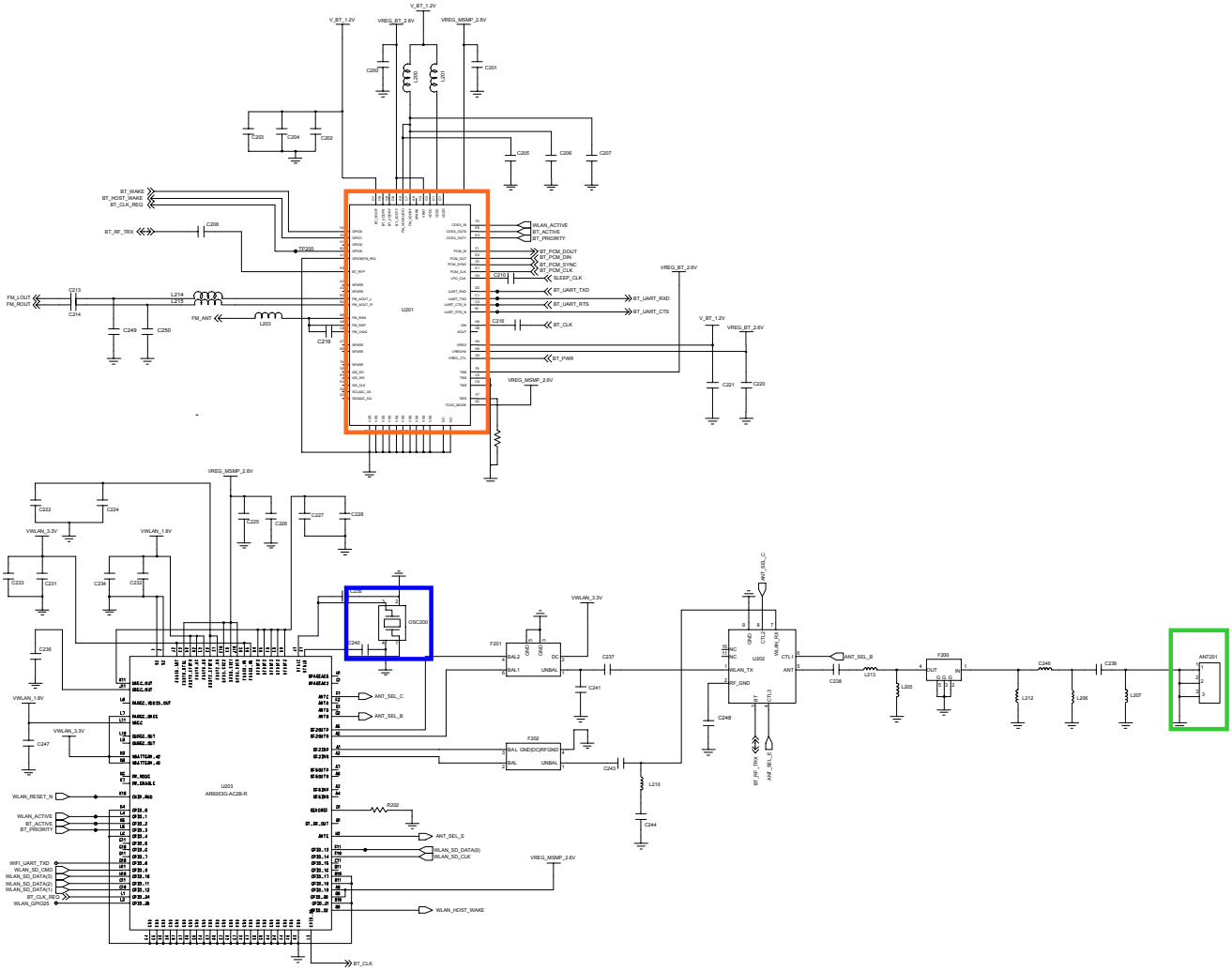




SAMSUNG Proprietary-Contents may change without notice
This Document can not be used without Samsung's authorization

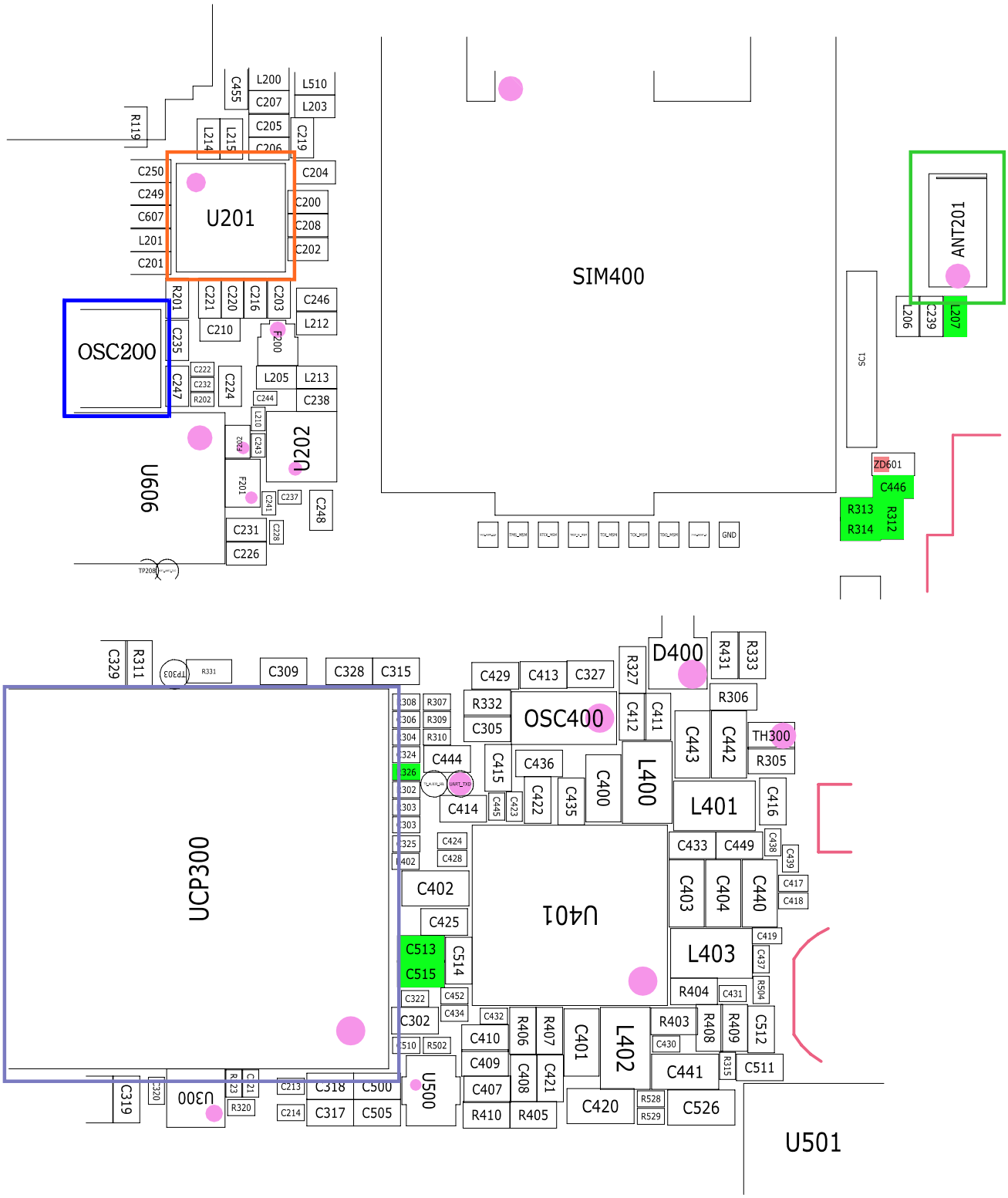




SAMSUNG Proprietary-Contents may change without notice
This Document can not be used without Samsung's authorization

## 8-4-11. FM RADIO

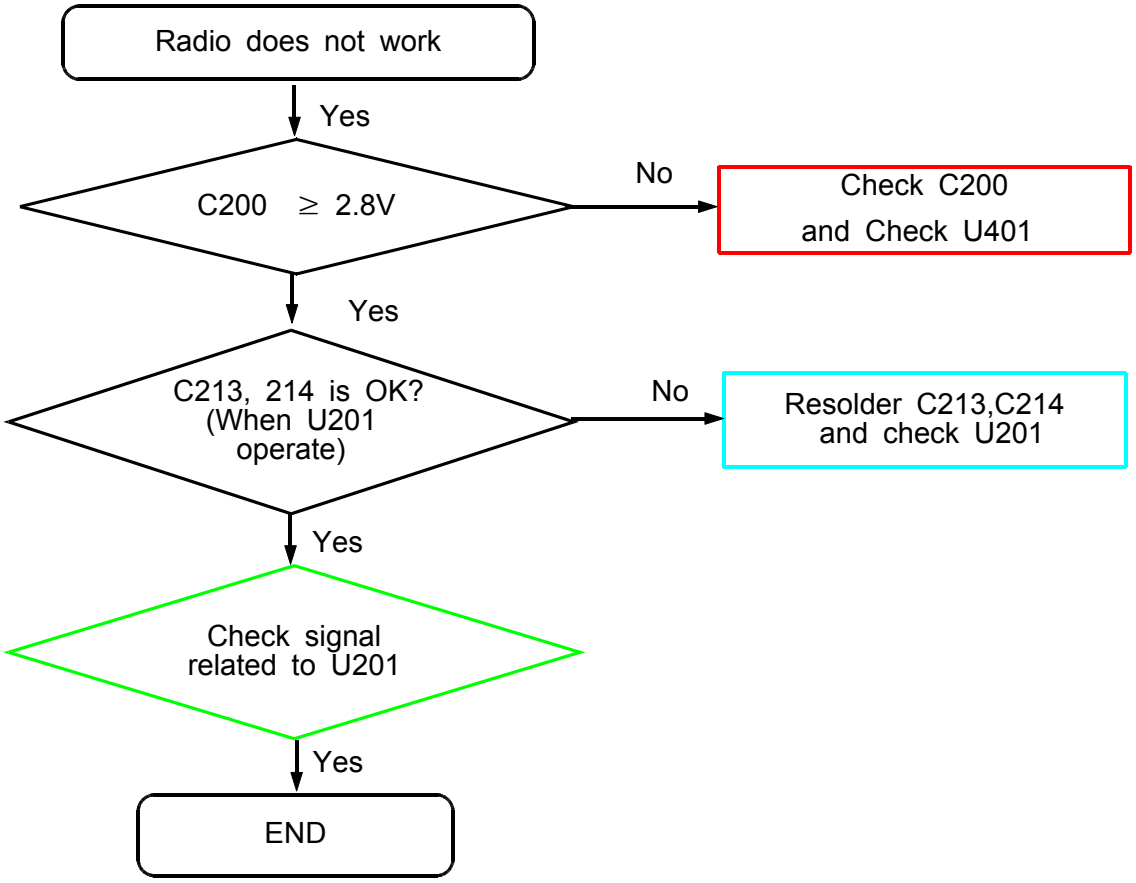




SAMSUNG Proprietary-Contents may change without notice
This Document can not be used without Samsung's authorization

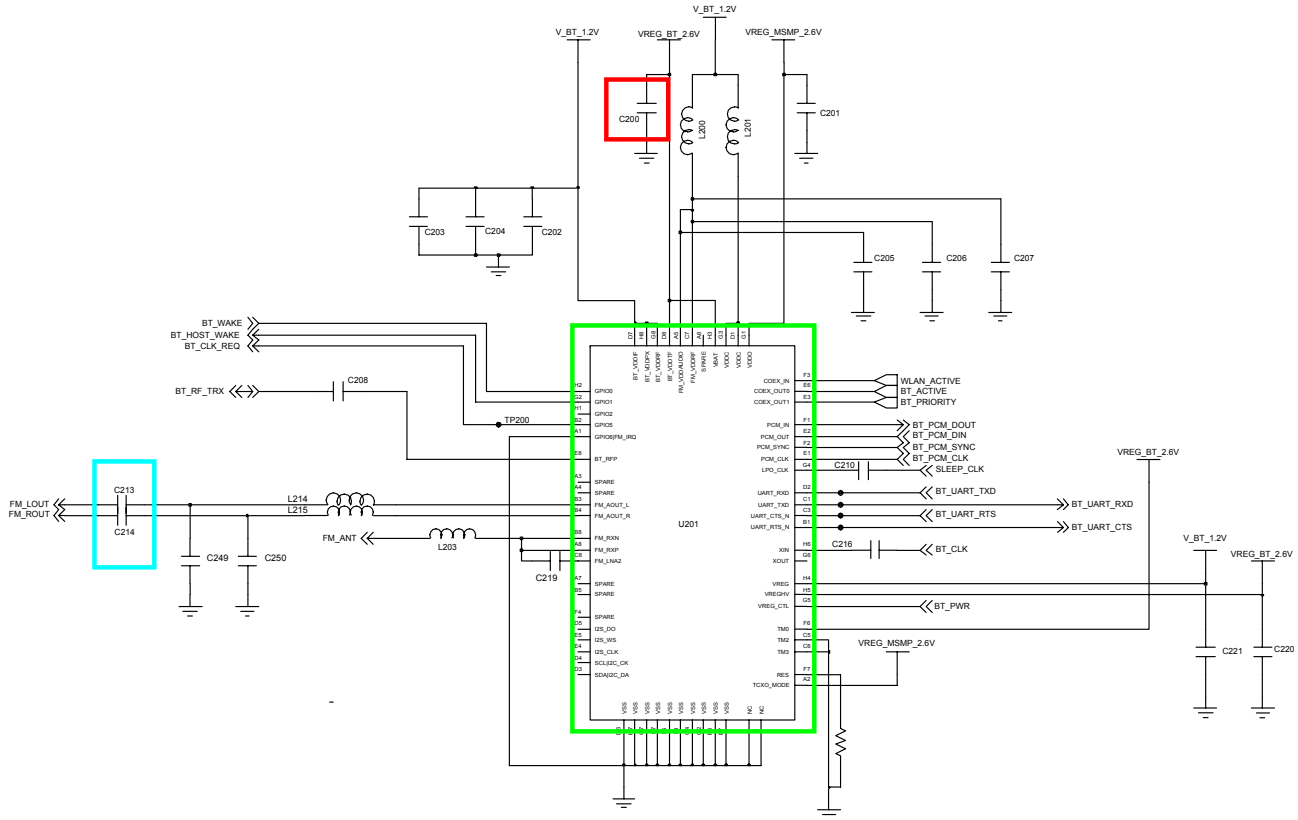


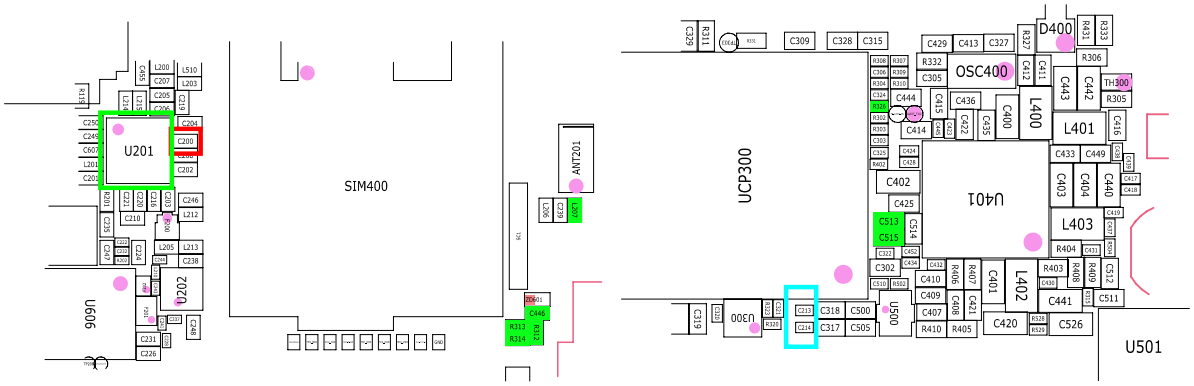




SAMSUNG Proprietary-Contents may change without notice
This Document can not be used without Samsung's authorization

## 8-4-12. GPS

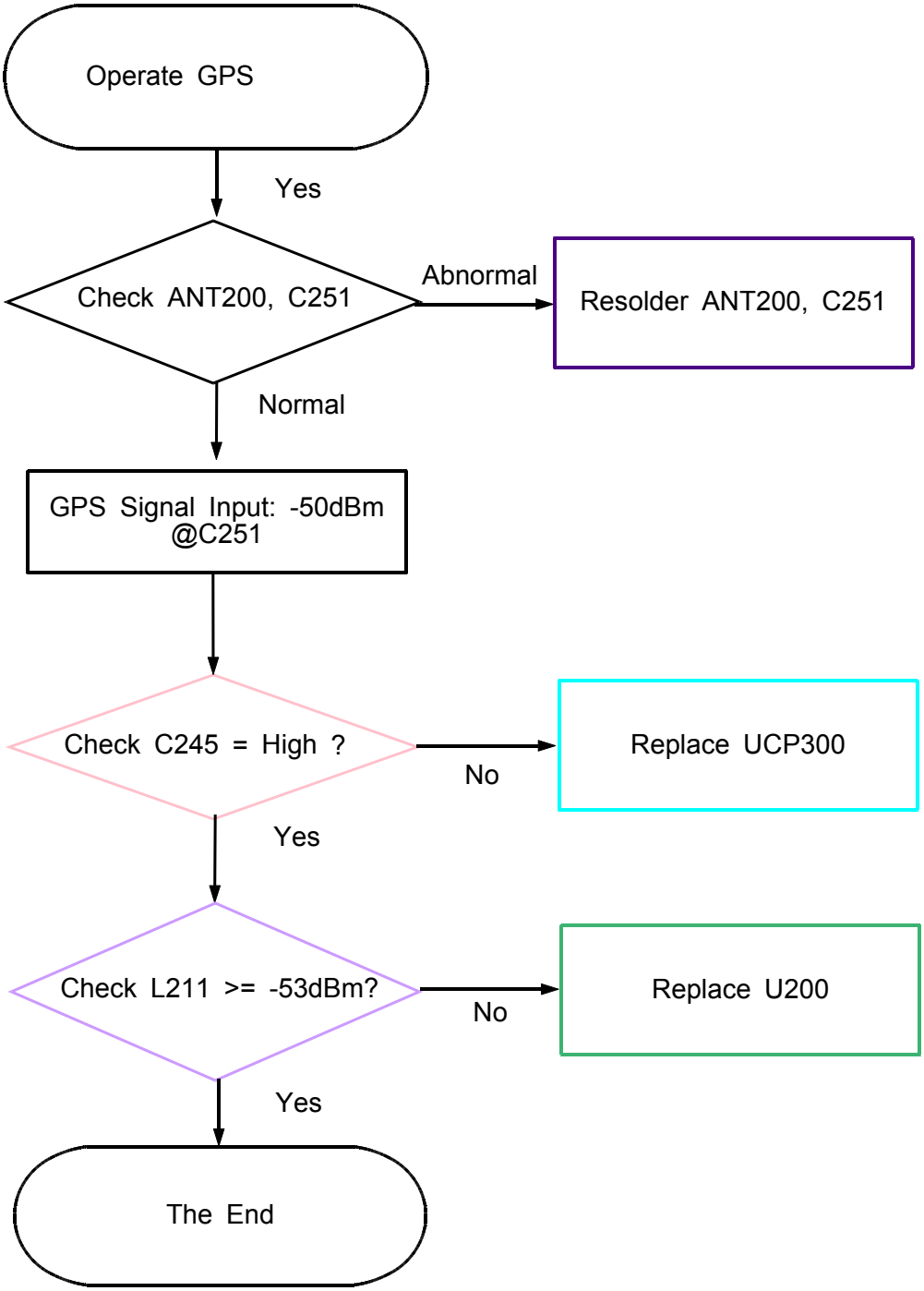




SAMSUNG Proprietary-Contents may change without notice
This Document can not be used without Samsung's authorization

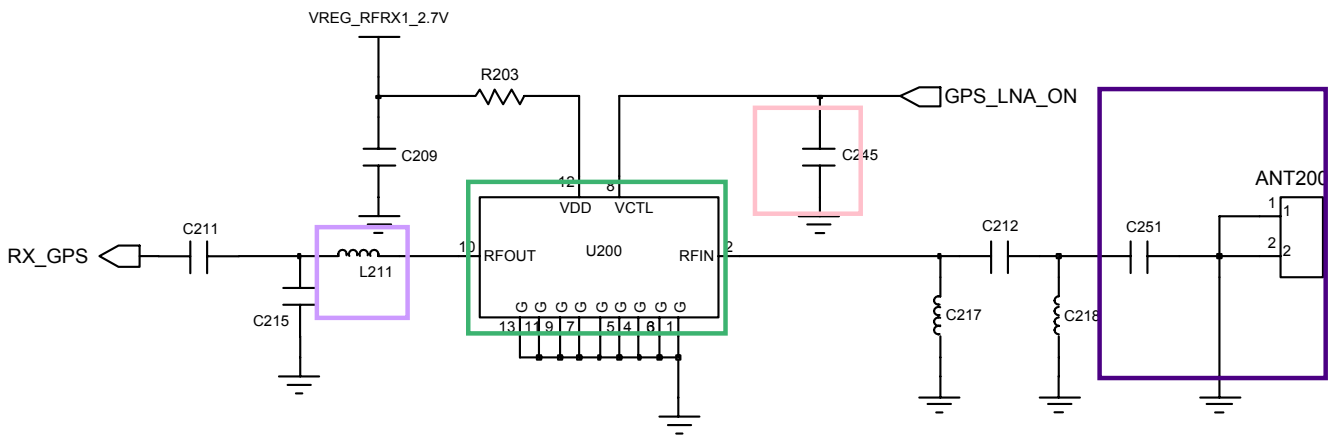


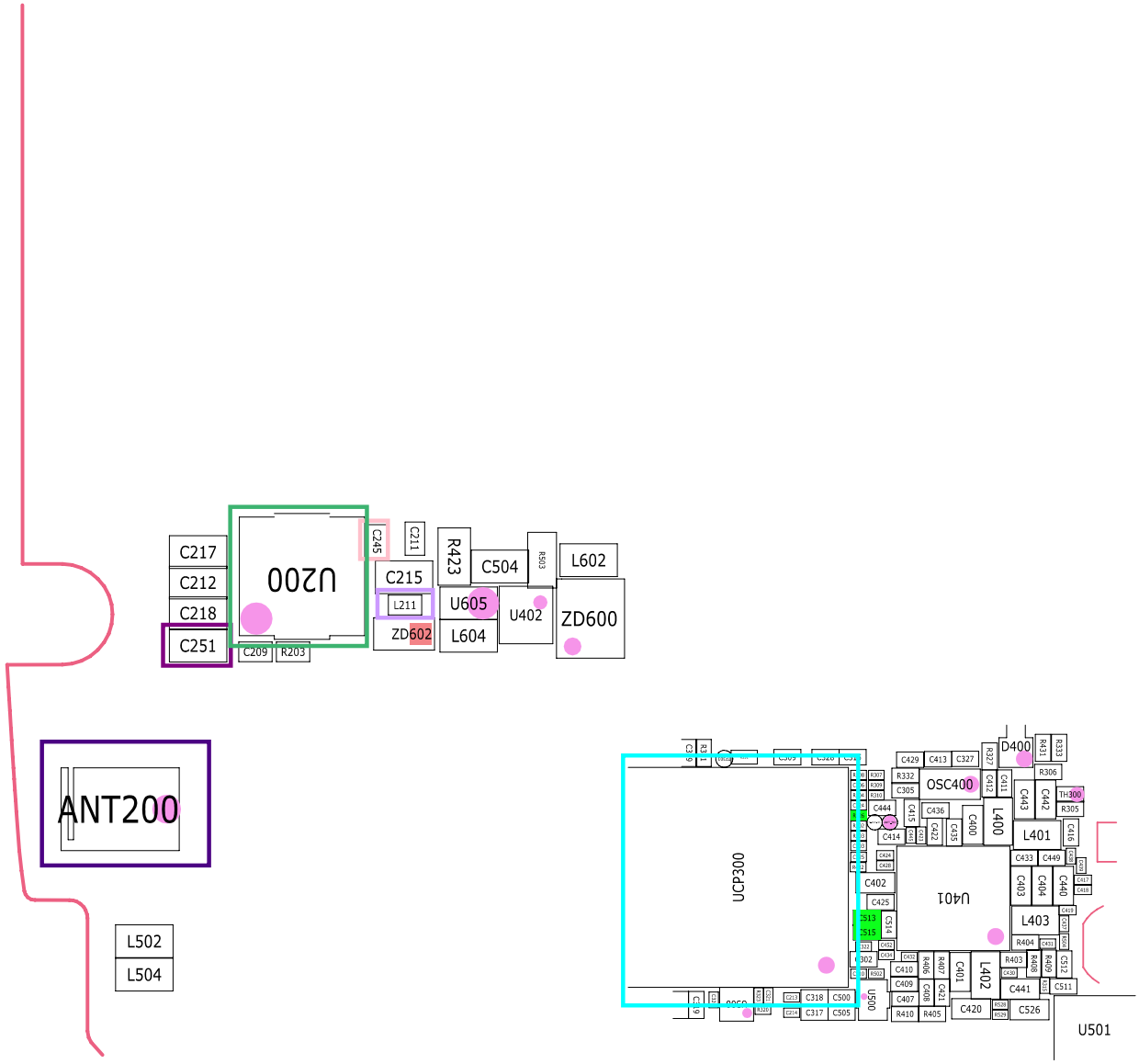




SAMSUNG Proprietary-Contents may change without notice
This Document can not be used without Samsung's authorization

8-5. Service Schematics

## - NC Point(Top View)

● : NC

**UME300**

| | 1 | 2 | 3 | 4 | 5 | 6 | 7 | 8 | 9 | 10 | 11 | 12 | 13 | 14 |
|---|---|---|---|---|---|---|---|---|---|---|---|---|---|---|
| A | ○ | ○ | ● | ○ | ○ | ○ | ○ | ○ | ○ | ○ | ○ | ○ | ○ | ○ |
| B | ○ | ● | ○ | ○ | ○ | ○ | ● | ● | ● | ○ | ● | ● | ○ | ○ |
| C | ○ | ● | ○ | ○ | ○ | ○ | ○ | ○ | ○ | ● | ● | ○ | ○ | ○ |
| D | ○ | ○ | ○ | ○ | | | | | | | | ● | ● | ○ |
| E | ● | ○ | ○ | | ○ | ● | ● | ● | ● | ● | | ● | ○ | ○ |
| F | ○ | ○ | ○ | | ● | | | | | ● | | ○ | ○ | ○ |
| G | ○ | ○ | ○ | | ○ | | | | | ● | | ○ | ○ | ○ |
| H | ○ | ○ | ○ | | ● | | | | | ● | | ○ | ○ | ○ |
| J | ○ | ○ | ○ | | ● | | | | | ● | | ○ | ● | ○ |
| K | ○ | ○ | ○ | | ● | ● | ○ | ○ | ● | ● | | ○ | ○ | ○ |
| L | ○ | ○ | ○ | | | | | | | | | ○ | ○ | ○ |
| M | ○ | ○ | ● | ○ | ○ | ○ | ○ | ○ | ● | ● | ● | ● | ○ | ○ |
| N | ○ | ○ | ● | ○ | ○ | ○ | ● | ○ | ● | ● | ● | ● | ○ | ○ |
| P | ○ | ○ | ○ | ○ | ○ | ○ | ○ | ○ | ○ | ○ | ○ | ○ | ○ | ○ |

**U401**

| | 1 | 2 | 3 | 4 | 5 | 6 | 7 | 8 | 9 | 10 | 11 |
|---|---|---|---|---|---|---|---|---|---|---|---|
| A | ● | ○ | ○ | ○ | ○ | ○ | ○ | ○ | ○ | ○ | ● |
| B | ○ | ○ | ○ | ○ | ○ | ○ | ○ | ○ | ○ | ○ | ○ |
| C | ○ | ○ | ○ | ○ | ○ | ○ | ○ | ○ | ○ | ○ | ○ |
| D | ○ | ○ | ○ | ○ | ○ | ○ | ○ | ○ | ○ | ○ | ○ |
| E | ○ | ○ | ○ | ○ | ○ | ○ | ○ | ○ | ○ | ○ | ○ |
| F | ○ | ○ | ○ | ○ | ○ | ○ | ○ | ○ | ○ | ○ | ○ |
| G | ○ | ○ | ○ | ○ | ○ | ○ | ○ | ○ | ○ | ○ | ○ |
| H | ○ | ○ | ○ | ○ | ○ | ○ | ○ | ○ | ○ | ○ | ○ |
| J | ○ | ○ | ○ | ○ | ○ | ○ | ○ | ○ | ○ | ○ | ○ |
| K | ● | ○ | ○ | ○ | ○ | ○ | ○ | ○ | ○ | ○ | ● |



SAMSUNG Proprietary-Contents may change without notice
This Document can not be used without Samsung's authorization

**UCP300**

| | 1 | 2 | 3 | 4 | 5 | 6 | 7 | 8 | 9 | 10 | 11 | 12 | 13 | 14 | 15 | 16 | 17 | 18 | 19 | 20 | 21 | 22 | 23 | 24 | 25 | 26 | 27 | 28 |
|---|---|---|---|---|---|---|---|---|---|---|---|---|---|---|---|---|---|---|---|---|---|---|---|---|---|---|---|---|
| A | ● | ● | ● | ● | ● | ● | ● | ● | ● | ● | ● | ● | ● | ● | ● | ● | ● | ● | ● | ● | ● | ● | ● | ● | ● | ● | ● | A |
| B | ● | ○ | ○ | ○ | ○ | ○ | ○ | ○ | ○ | ○ | ○ | ○ | ○ | ○ | ○ | ○ | ○ | ○ | ○ | ○ | ○ | ○ | ○ | ○ | ○ | ○ | ● | B |
| C | ● | ○ | ○ | ○ | ○ | ○ | ○ | ○ | ○ | ○ | ○ | ○ | ○ | ○ | ○ | ○ | ○ | ○ | ○ | ○ | ○ | ○ | ○ | ○ | ○ | ○ | ● | C |
| D | ● | ○ | ○ | | | | | | | | | | | | | | | | | | | | | | ○ | ○ | ● | D |
| E | ● | ○ | ○ | | ○ | ○ | ○ | ○ | ○ | ○ | ○ | ○ | ○ | ○ | ○ | ○ | ○ | ○ | ○ | ○ | ○ | ○ | ○ | | ○ | ○ | ● | E |
| F | ● | ○ | ○ | | ○ | ○ | ○ | ○ | ○ | ○ | ○ | ○ | ○ | ○ | ○ | ○ | ○ | ○ | ○ | ○ | ○ | ○ | ○ | | ○ | ○ | ● | F |
| G | ● | ○ | ○ | | ○ | ○ | | | | | | | | | | | | | | | | ○ | ○ | | ○ | ○ | ● | G |
| H | ● | ○ | ○ | | ○ | ○ | | ○ | ○ | ○ | ○ | ○ | ○ | ○ | ○ | ○ | ○ | ○ | ○ | ○ | | ○ | ○ | | ○ | ○ | ● | H |
| J | ● | ○ | ○ | | ○ | ○ | | ○ | ○ | ○ | ○ | ○ | ○ | ○ | ○ | ○ | ○ | ○ | ○ | ○ | | ○ | ○ | | ○ | ○ | ● | J |
| K | ● | ○ | ○ | | ○ | ○ | | ○ | ○ | | | | | | | | | | ○ | ○ | | ○ | ○ | | ○ | ○ | ● | K |
| L | ● | ○ | ○ | | ○ | ○ | | ○ | ○ | | | ○ | ○ | ○ | ○ | ○ | ○ | | ○ | ○ | | ○ | ○ | | ○ | ○ | ● | L |
| M | ● | ○ | ○ | | ○ | ○ | | ○ | ○ | | ○ | ○ | ○ | ○ | ○ | ○ | ○ | | ○ | ○ | | ○ | ○ | | ○ | ○ | ● | M |
| N | ● | ○ | ○ | | ○ | ○ | | ○ | ○ | | ○ | ○ | ○ | ○ | ○ | ○ | ○ | | ○ | ○ | | ○ | ○ | | ○ | ○ | ● | N |
| P | ● | ○ | ○ | | ○ | ○ | | ○ | ○ | | ○ | ○ | ○ | ○ | ○ | ○ | ○ | | ○ | ○ | | ○ | ○ | | ○ | ○ | ● | P |
| R | ● | ○ | ○ | | ○ | ○ | | ○ | ○ | | ○ | ○ | ○ | ○ | ○ | ○ | ○ | | ○ | ○ | | ○ | ○ | | ○ | ○ | ● | R |
| T | ● | ○ | ○ | | ○ | ○ | | ○ | ○ | | ○ | ○ | ○ | ○ | ○ | ○ | ○ | | ○ | ○ | | ○ | ○ | | ○ | ○ | ● | T |
| U | ● | ○ | ○ | | ○ | ○ | | ○ | ○ | | ○ | ○ | ○ | ○ | ○ | ○ | ○ | | ○ | ○ | | ○ | ○ | | ○ | ○ | ● | U |
| V | ● | ○ | ○ | | ○ | ○ | | ○ | ○ | | | | | | | | | | ○ | ○ | | ○ | ○ | | ○ | ○ | ● | V |
| W | ● | ○ | ○ | | ○ | ○ | | ○ | ○ | ○ | ○ | ○ | ○ | ○ | ○ | ○ | ○ | ○ | ○ | ○ | | ○ | ○ | | ○ | ○ | ● | W |
| Y | ● | ○ | ○ | | ○ | ○ | | ○ | ○ | ○ | ○ | ○ | ○ | ○ | ○ | ○ | ○ | ○ | ○ | ○ | | ○ | ○ | | ○ | ○ | ● | Y |
| AA | ● | ○ | ○ | | ○ | ○ | | | | | | | | | | | | | | | | ○ | ○ | | ○ | ○ | ● | AA |
| AB | ● | ○ | ○ | | ○ | ○ | ○ | ○ | ○ | ○ | ○ | ○ | ○ | ○ | ○ | ○ | ○ | ○ | ○ | ○ | ○ | ○ | ○ | | ○ | ○ | ● | AB |
| AC | ● | ○ | ○ | | ○ | ○ | ○ | ○ | ○ | ○ | ○ | ○ | ○ | ○ | ○ | ○ | ○ | ○ | ○ | ○ | ○ | ○ | ○ | | ○ | ○ | ● | AC |
| AD | ● | ○ | ○ | | | | | | | | | | | | | | | | | | | | | | ○ | ○ | ● | AD |
| AE | ● | ○ | ○ | ○ | ○ | ○ | ○ | ○ | ○ | ○ | ○ | ○ | ○ | ○ | ○ | ○ | ○ | ○ | ○ | ○ | ○ | ○ | ○ | ○ | ○ | ○ | ● | AE |
| AF | ● | ○ | ○ | ○ | ○ | ○ | ○ | ○ | ○ | ○ | ○ | ○ | ○ | ○ | ○ | ○ | ○ | ○ | ○ | ○ | ○ | ○ | ○ | ○ | ○ | ○ | ● | AF |
| AG | ● | ● | ● | ● | ● | ● | ● | ● | ● | ● | ● | ● | ● | ● | ● | ● | ● | ● | ● | ● | ● | ● | ● | ● | ● | ● | ● | AG |
| | 1 | 2 | 3 | 4 | 5 | 6 | 7 | 8 | 9 | 10 | 11 | 12 | 13 | 14 | 15 | 16 | 17 | 18 | 19 | 20 | 21 | 22 | 23 | 24 | 25 | 26 | 27 | |



SAMSUNG Proprietary-Contents may change without notice
This Document can not be used without Samsung's authorization